Specifications.
The BMW 1 Series 3-door. 116i.

		BMW 116i 3-door
Body		
No. of doors/seats		3 / 4 (5)
Length/width/height [1] (unladen)	mm	4329 / 1765 / 1421
Wheelbase	mm	2690
Track, front/rear	mm	1535 / 1569
Ground clearance	mm	140
Turning circle	m	10.9
Fuel tank capacity	approx. ltr	52
Cooling system incl. heater	ltr	7.7
Engine oil [2]	ltr	4.25
Weight, unladen, to DIN/EU	kg	1300 / 1375
Max. load to DIN	kg	565
Max. permissible weight	kg	1865
Max. axle load, front/rear	kg	850 / 1090
Max. trailer load (12%) braked/unbraked	kg	1200 / 650
Max. roof load/max towbar download	kg	75 / 75
Luggage comp. capacity	ltr	360 – 1200
Air resistance	C_d x A	0.31 x 2.14
Power Unit		
Config./No. of cyls./valves		in-line / 3 / 4
Engine technology		BMW TwinPower Turbo technology: turbocharger, High Precision Direct Injection, fully variable valve control (VALVETRONIC), Double-VANOS variable camshaft control
Effective capacity	cc	1499
Stroke/bore	mm	94.6 / 82.0
Compression ratio	:1	11.0
Fuel		min RON 91
Max. output	kW/hp	80 / 109
at	rpm	4250
Max torque	Nm	180
at	rpm	1250-4250
Electrical System		
Battery/installation	Ah/–	90 / luggage comp.
Alternator	A/W	180 / 2520
Driving Dynamics and Safety		
Suspension, front		Aluminium double-joint spring strut axle
Suspension, rear		Five-link axle in lightweight steel construction with double elastic bearing
Brakes, front		Single-piston floating-calliper disc brakes
Brakes, rear		Single-piston floating-calliper disc brakes
Driving stability systems		Standard: DSC incl. ABS, ASC and DTC (Dynamic Traction Control), CBC (Cornering Brake Control), DBC (Dynamic Brake Control), Dry Braking function, Fading Compensation, Start-Off Assistant
Safety equipment		Standard: airbags for driver and front passenger, side airbags for driver and front passenger, head airbags front and rear, three-point inertia-reel seatbelts on all seats with belt tensioner and belt force limiter at the front, crash sensors, Tyre Defect Indicator
Steering		Electric Power Steering (EPS), optional: Servotronic function, variable sport steering
Steering ratio, overall	:1	15.0
Tyres, front/rear		195/55 R16 87H
Rims, front/rear		6.5J x 16 steel

			BMW 116i 3-door
Transmission			
Type of transmission			6-speed manual
Gear ratios	I	:1	4.552
	II	:1	2.548
	III	:1	1.659
	IV	:1	1.230
	V	:1	1.000
	VI	:1	0.830
	R	:1	4.138
Final drive		:1	2.813
Performance			
Power-to-weight ratio (DIN)		kg/kW	16.3
Output per litre		kW/ltr	53.4
Acceleration	0–100 km/h	s	10.9
in 5th gear	80–120 km/h	s	14.8
Top speed		km/h	195
BMW EfficientDynamics			
BMW EfficientDynamics standard features			Brake Energy Regeneration with recuperation display, Electric Power Steering (EPS), Auto Start Stop function, Optimum Gearshift Indicator, ECO PRO mode, intelligent lightweight construction, optimised aerodynamic attributes, on-demand operation of ancillary units, map-controlled oil pump, differential with optimised warm-up behaviour, tyres with reduced rolling resistance
Fuel Consumption EU [3]			
With standard tyres, rims 7J x 16 and tyres 205/55 R16 as well as winter tyres			
Urban		ltr/100 km	6.3
Extra-urban		ltr/100 km	4.2
Combined		ltr/100 km	5.0
CO_2		g/km	116
With rims 7J x 17 and tyres 205/50 R17, with rims 7.5J x 17 and tyres 225/45 R 17, with rims 7.5J x 17 front, 8J x 17 rear and tyres 225/45 R17 front, 245/40 R17 rear			
Urban		ltr/100 km	6.7
Extra-urban		ltr/100 km	4.5
Combined		ltr/100 km	5.3
CO_2		g/km	123
With rims 7.5J x 18 front, 8J x 18 rear and tyres 225/40 R18 front, 245/35 R18 rear			
Urban		ltr/100 km	6.8
Extra-urban		ltr/100 km	4.6
Combined		ltr/100 km	5.4
CO_2		g/km	126
Emission rating			EU6

Specifications apply to ACEA markets/data relevant to homologation apply in part only to Germany (weight)

[1] Height with roof fin: 1440 mm
[2] Oil change
[3] Fuel consumption and CO_2 emissions depend on the selected tyre format

The BMW 1 Series 3-door. 118i.

		BMW 118i 3-door
Body		
No. of doors/seats		3 / 4 (5)
Length/width/height [1] (unladen)	mm	4329 / 1765 / 1421
Wheelbase	mm	2690
Front/rear track	mm	1535 / 1569
Ground clearance	mm	140
Turning circle	m	10.9
Fuel capacity	approx. l	52
Engine oil capacity [2]	l	4.25
Weight, unladen (DIN/EU)	kg	1300 / 1375 (1315 / 1390)
Payload (DIN)	kg	565
Max. permissible weight	kg	1865 (1880)
Max. axle load, front/rear	kg	865 / 1090
Max. trailer load (12%) braked/unbraked	kg	1300 / 650
Max. roof load/max towbar download	kg	75 / 75
Luggage comp. capacity	l	360 – 1200
Air resistance	Cd x A	0.31 x 2.14
Engine		
Type/no. of cylinders/valves		in-line / 3 / 4
Engine technology		BMW TwinPower Turbo technology: turbocharger, direct injection system High Precision Injection, fully variable valve control (VALVETRONIC) and double VANOS variable camshaft timing
Effective capacity	cc	1499
Stroke/bore	mm	94.6 / 82.0
Compression ratio	:1	11.0
Fuel type		min. RON 91
Output	kW/hp	100 / 136
at rpm		4400
Torque	Nm	220
at rpm		1250 – 4300
Electrical		
Battery charge/location	Ah/–	90 / luggage compartment
Alternator current/output	A/W	180 / 2520
Driving Dynamics and Safety		
Front suspension		Aluminium double-joint spring strut axle
Rear suspension		Five-link axle in lightweight steel construction with double elastic bearing
Front brakes		Single-piston floating-calliper disc brakes
Rear brakes		Single-piston floating-calliper disc brakes
Driving stability systems		Standard: DSC incl. ABS, ASC and DTC (Dynamic Traction Control), CBC Cornering Brake Control, DBC Dynamic Brake Control, Dry Braking function, Fading Compensation, Start-Off Assistant
Safety equipment		Standard: driver and front-seat passenger airbags, driver and front-seat passenger side airbags, head airbags front and rear, three-point automatic seatbelts for all seats, seatbelt tensioners and seatbelt force limiters in front seats, crash sensors, Tyre Defect Indicator
Steering		Electromechanical rack-and-pinion power steering (EPS); optional: Servotronic function, variable sport steering
Overall steering ratio	:1	15.0
Front/rear tyres		195/55 R16 87H
Front/rear wheels		6.5J x 16 steel

			BMW 118i 3-door
Transmission			
Type of gearbox			6-speed manual (optional: 8-speed Steptronic)
Gear ratios	I	:1	4.552 (4.714)
	II	:1	2.548 (3.143)
	III	:1	1.659 (2.106)
	IV	:1	1.230 (1.667)
	V	:1	1.000 (1.285)
	VI	:1	0.830 (1.000)
	VII	:1	– (0.389)
	VIII	:1	– (0.667)
	R	:1	4.138 (3.295)
Final drive		:1	2.813 (3.077)
Performance			
Weight-to-power ratio (DIN unladen)		kg/kW	13.0 (13.2)
Specific power output		kW/l	66.7
Acceleration	0–100 km/h	sec.	8.5 (8.7)
in 5th gear	80–120 km/h	sec.	10.6 (–)
Max. speed		km/h	210 (210)
BMW EfficientDynamics			
BMW EfficientDynamics Features included as standard			Brake Energy Regeneration with recuperation display, electric power steering (EPS), Auto Start Stop function, gear shift indicator, ECO PRO mode with coasting function (automatic), intelligent lightweight construction, optimised aerodynamic attributes, on-demand operation of ancillary units, map-controlled oil pump, differential with optimised warm-up behaviour, tyres with reduced rolling resistance
Fuel consumption (EU) [3]			
with standard wheels and tyres, with 7J x 16" rims and 205/55 R16 tyres and with winter tyres			
Urban		l/100 km	6.2 (5.9)
Extra-urban		l/100 km	4.3 (4.2)
Total		l/100 km	5.0 (4.8)
CO_2 emissions		g/km	116 (112)
with 7J x 17" rims and 205/50 R17 tyres, with 7.5J x 17" rims and 225/45 R17 tyres, with 7.5J x 17" front rims, 8J x 17" rear rims, 225/45 R17 front tyres and 245/40 R17 rear tyres			
Urban		l/100 km	6.5 (6.3)
Extra-urban		l/100 km	4.5 (4.5)
Combined		l/100 km	5.3 (5.1)
CO_2 emissions		g/km	123 (119)
with 7.5J x 18" front rims, 8J x 18" rear rims, 225/40 R18 front tyres and 245/35 R18 rear tyres			
Urban		l/100 km	6.7 (6.4)
Extra-urban		l/100 km	4.7 (4.6)
Total		l/100 km	5.4 (5.2)
CO_2 emissions		g/km	126 (122)
Emissions standard			EU6

Technical data valid for ACEA countries/Some permitted weights valid only for Germany
Figures in brackets are for vehicles with automatic transmission

[1] Height with roof aerial: 1440 mm
[2] Oil change volume
[3] Fuel consumption and CO_2 emissions depend on the selected tyre format

The BMW 1 Series 3-door. 120i, 125i.

		BMW 120i 3-door	BMW 125i 3-door
Body			
No. of doors/seats		3 / 4 (5)	3 / 4 (5)
Length/width/height [1] (unladen)	mm	4329 / 1765 / 1421	4329 / 1765 / 1421
Wheelbase	mm	2690	2690
Front/rear track	mm	1535 / 1569	1521 / 1556
Ground clearance	mm	140	140
Turning circle	m	10.9	10.9
Fuel capacity	approx. l	52	52
Engine oil capacity [2)]	l	5.25	5.25
Weight, unladen (DIN/EU)	kg	1365 / 1440 (1375 / 1450)	1400 / 1475
Payload (DIN)	kg	565	565
Max. permissible weight	kg	1930 (1940)	1965
Max. axle load, front/rear	kg	910 / 1090	920 / 1100
Max. trailer load (12%) braked/unbraked	kg	1500 / 680	1500 / 680
Max. roof load/max towbar download	kg	75 / 75	75 / 75
Luggage comp. capacity	l	360 – 1200	360 – 1200
Air resistance	Cd x A	0.31 x 2.14	0.32 x 2.14
Engine			
Type/no. of cylinders/valves		in-line / 4 / 4	in-line / 4 / 4
Engine technology		BMW TwinPower Turbo technology: twin-scroll turbocharger, direct injection system High Precision Injection, fully variable valve control (VALVETRONIC) and double VANOS variable camshaft timing	
Effective capacity	cc	1998	1998
Stroke/bore	mm	94.6 / 82.0	94.6 / 82.0
Compression ratio	:1	11.0	10.2
Fuel type		min RON 91	min RON 91
Output	kW/hp	135 / 184	165 / 224
at rpm		5000	5200–6500
Torque	Nm	290 (270)	310
at rpm		1350 – 4250 (1350–4600)	1400 – 5000
Electrical			
Battery charge/location	Ah/–	80 / luggage compartment	80 / luggage compartment
Driving Dynamics and Safety			
Front suspension		Aluminium double-joint spring strut axle	
Rear suspension		Five-link axle in lightweight steel construction with double elastic bearing	
Front brakes		Single-piston floating-calliper disc brakes	
Rear brakes		Single-piston floating-calliper disc brakes	
Driving stability systems		Standard: DSC incl. ABS, ASC and DTC (Dynamic Traction Control), CBC Cornering Brake Control, DBC Dynamic Brake Control, Dry Braking function, Fading Compensation, Start-Off Assistant	
Safety equipment		Standard: airbags for driver and front passenger, side airbags for driver and front passenger, head airbags front and rear, three-point inertia-reel seatbelts on all seats with belt tensioner and belt force limiter at the front, crash sensors, Tyre Defect Indicator	
Steering		Electromechanical rack-and-pinion power steering (EPS); optional: Servotronic function, variable sport steering	
Overall steering ratio	:1	15.0	15.0
Front/rear tyres		195/55 R16 87W	205/50 R17 91W
Front/rear wheels		6.5J x 16 steel	7J x 17 light-alloy

			BMW 120i 3-door	BMW 125i 3-door
Transmission				
Type of gearbox			6-speed manual (optional: 8-speed Steptronic)	8-speed Steptronic
Gear ratios	I	:1	4.002 (5.000)	5.000
	II	:1	2.130 (3.200)	3.200
	III	:1	1.396 (2.143)	2.143
	IV	:1	1.000 (1.720)	1.720
	V	:1	0.781 (1.314)	1.314
	VI	:1	0.668 (1.000)	1.000
	VII	:1	– (0.822)	0.822
	VIII	:1	– (0.640)	0.640
	R	:1	3.647 (3.456)	3.456
Final drive		:1	3.385 (2.813)	2.813
Performance				
Weight-to-power ratio (DIN unladen)		kg/kW	10.1 (10.2)	8.5
Specific power output		kW/l	67.6	82.6
Acceleration	0–100 km/h	sec	7.1 (7.1)	6.1
in 5th gear	80–120 km/h	sec	8.5 (–)	–
Max. speed		km/h	230 (225)	243
BMW EfficientDynamics				
BMW EfficientDynamics Features included as standard			Brake Energy Regeneration with recuperation display, electric power steering (EPS), Auto Start Stop function, gear shift indicator, ECO PRO mode with coasting function (automatic), intelligent lightweight construction, optimised aerodynamic attributes, on-demand operation of ancillary units, map-controlled oil pump, differential with optimised warm-up behaviour, tyres with reduced rolling resistance	
Fuel consumption (EU) [3]				
with standard wheels and tyres: 6.5J x 16" rims and 195/55 R16 tyres (BMW 120i), 7J x 17" rims and 205/50 R17 tyres (BMW 125i)				
Urban		l/100 km	7.6 (7.0)	7.2
Extra-urban		l/100 km	4.7 (4.7)	4.9
Total		l/100 km	5.7 (5.5)	5.7
CO_2 emissions		g/km	131 (126)	130
with 7J x 17" rims and 205/50 R17 tyres (BMW 120i), with 7.5J x 17 rims and 225/45 R 17 tyres, with 7.5J x 17" front rims, 8J x 17" rear rims and 225/45 R17 front tyres, 245/40 R17 rear tyres				
Urban		l/100 km	8.0 (7.4)	7.4
Extra-urban		l/100 km	4.9 (4.9)	5.0
Total		l/100 km	6.0 (5.8)	5.9
CO_2 emissions		g/km	138 (133)	134
with 7.5J x 18" front rims, 8J x 18" rear rims and 225/40 R18 front tyres, 245/35 R18 rear tyres and with winter tyres				
Urban		l/100 km	8.1 (7.4)	7.4
Extra-urban		l/100 km	5.0 (5.0)	5.0
Total		l/100 km	6.1 (5.9)	5.9
CO_2 emissions		g/km	140 (135)	134
Emissions standard			EU6	EU6

Technical data valid for ACEA countries/Some permitted weights valid only for Germany
BMW 120i: Figures in brackets are for vehicles with automatic transmission

[1] Height including roof aerial
[2] Oil change volume
[3] Fuel consumption and CO_2 emissions depend on the selected tyre format

The BMW 1 Series 3-door. M140i.

		BMW M140i 3-door
Body		
No. of doors/seats		3 / 4 (5)
Length/width/height[1)] (unladen)	mm	4324 / 1765 / 1411
Wheelbase	mm	2690
Track, front/rear	mm	1516 / 1534
Ground clearance	mm	130
Turning circle	m	10.9
Tank capacity	approx. ltr	52
Engine oil[2)]	ltr	6.5
Weight, unladen, to DIN/EU	kg	1445 / 1520 (1470 / 1545)
Max. load to DIN	kg	565
Max. permissible weight	kg	2010 (2035)
Max. axle load, front/rear	kg	970 / 1120
Max. trailer load (12%) braked/unbraked	kg	– / –
Max. roof load/towbar download	kg	75 / –
Luggage comp. capacity	ltr	360 – 1200
Air resistance	C_d x A	0.34 x 2.14
Engine		
Config./No. of cyls./valves		in-line / 6 / 4
Engine technology		M Performance TwinPower Turbo technology with twin-scroll turbocharger, High Precision Direct Injection, fully variable valve control (VALVETRONIC) and double-VANOS variable camshaft control
Effective capacity	cc	2998
Stroke/bore	mm	94.6 / 82.0
Compression ratio	:1	11.0
Fuel grade		min. RON 91
Output	kW/hp	250 / 340
at	rpm	5500
Torque	Nm	500
at	rpm	1520 – 4500
Electrical System		
Battery/Installation	Ah/–	80 / luggage comp.
Driving Dynamics and Safety		
Suspension, front		Aluminium double-joint spring strut axle with M-specific elastokinematics
Suspension, rear		Five-link axle in lightweight steel construction with double elastic bearing
Brakes, front		Four-piston fixed-calliper disc brakes
Brakes, rear		Two-piston fixed-calliper disc brakes
Driving stability systems		Standard: DSC incl. ABS, ASC and DTC (Dynamic Traction Control), CBC (Cornering Brake Control), DBC (Dynamic Brake Control), Dry Braking function, Fading Compensation, Start-Off Assistant
Safety equipment		Standard: airbags for driver and front passenger, side airbags for driver and front passenger, head airbags front and rear, three-point inertia-reel seatbelts on all seats with belt tensioner and belt force limiter at the front, crash sensors, Tyre Defect Indicator
Steering		Electric Power Steering (EPS), variable sport steering
Steering ratio, overall	:1	14.5
Tyres, front/rear		225/40 R18 88Y/ 245/35 R 18 92Y XL
Rims, front/rear		7.5J x 18 light-alloy/ 8J x 18 light-alloy

			BMW M140i 3-door
Transmission			
Type of gearbox			8-speed Steptronic Sport transmission
Gear ratios	I	:1	5.000
	II	:1	3.200
	III	:1	2.143
	IV	:1	1.720
	V	:1	1.314
	VI	:1	1.000
	VII	:1	0.822
	VIII	:1	0.640
	R	:1	3.456
Final drive		:1	2.813

Performance			
Power-to-weight ratio (DIN)		kg/kW	5.9
Output per litre		kW/ltr	83.4
Acceleration	0–100 km/h	s	4.6
in 5th gear	80–120 km/h	s	–
Top speed		km/h	250

BMW EfficientDynamics	
BMW EfficientDynamics, standard features	Brake Energy Regeneration with recuperation display, Electric Power Steering (EPS), Auto Start Stop function, Optimum Gearshift Indicator, ECO PRO mode with coasting function (automatic), intelligent lightweight construction, optimised aerodynamic attributes, on-demand operation of ancillary units, map-controlled oil pump, differential with optimised warm-up behaviour, tyres with reduced rolling resistance

Fuel consumption EU		
Urban	ltr/100 km	9.4
Extra-urban	ltr/100 km	5.8
Combined	ltr/100 km	7.1
CO_2	g/km	163
Emission rating		EU6

Specifications apply to ACEA markets; data relevant to homologation applicable in part only to Germany (weight)
Figures in brackets apply to automatic transmission

[1] Height including roof aerial
[2] Oil change volume

The BMW 1 Series 3-door. M140i xDrive.

		BMW M140i xDrive 3-door
Body		
No. of doors/seats		3 / 4 (5)
Length/width/height[1)] (unladen)	mm	4324 / 1765 / 1411
Wheelbase	mm	2690
Track, front/rear	mm	1516 / 1534
Ground clearance	mm	130
Turning circle	m	11.3
Tank capacity	approx. ltr	52
Engine oil[2)]	ltr	6.5
Weight, unladen, to DIN/EU	kg	1540 / 1615
Max. load to DIN	kg	550
Max. permissible weight	kg	2090
Max. axle load, front/rear	kg	1040 / 1120
Max. trailer load (12%) braked/unbraked	kg	– / –
Max. roof load/towbar download	kg	75 / –
Luggage comp. capacity	ltr	360 – 1200
Air resistance	C_d x A	0.35 x 2.14
Engine		
Config./No. of cyls./valves		in-line / 6 / 4
Engine technology		M Performance TwinPower Turbo technology with twin-scroll turbocharger, High Precision Direct Injection, fully variable valve control (VALVETRONIC) and double-VANOS variable camshaft control
Effective capacity	cc	2998
Stroke/bore	mm	94.6 / 82.0
Compression ratio	:1	11.0
Fuel grade		min. RON 91
Output	kW/hp	250 / 340
at	rpm	5500
Torque	Nm	500
at	rpm	1520 – 4500
Electrical System		
Battery/Installation	Ah/–	80 / luggage comp.
Driving Dynamics and Safety		
Suspension, front		Aluminium double-joint spring strut axle with M-specific elastokinematics
Suspension, rear		Five-link axle in lightweight steel construction with double elastic bearing
Brakes, front		Four-piston fixed-calliper disc brakes
Brakes, rear		Two-piston fixed-calliper disc brakes
Driving stability systems		Standard: DSC incl. ABS, ASC and DTC (Dynamic Traction Control), CBC (Cornering Brake Control), DBC (Dynamic Brake Control), Dry Braking function, Fading Compensation, Start-Off Assistant, linked to xDrive all-wheel-drive system in Integrated Chassis Management (ICM)
Safety equipment		Standard: airbags for driver and front passenger, side airbags for driver and front passenger, head airbags front and rear, three-point inertia-reel seatbelts on all seats with belt tensioner and belt force limiter at the front, crash sensors, Tyre Defect Indicator
Steering		Electric Power Steering (EPS), variable sport steering
Steering ratio, overall	:1	14.6
Tyres, front/rear		225/40 R18 88Y/ 245/35 R 18 92Y XL
Rims, front/rear		7.5J x 18 light-alloy/ 8J x 18 light-alloy

			BMW M140i xDrive 3-door
Transmission			
Type of gearbox			8-speed Steptronic Sport transmission
Gear ratios	I	:1	5.000
	II	:1	3.200
	III	:1	2.143
	IV	:1	1.720
	V	:1	1.314
	VI	:1	1.000
	VII	:1	0.822
	VIII	:1	0.640
	R	:1	3.456
Final drive		:1	2.813
Performance			
Power-to-weight ratio (DIN)		kg/kW	6.2
Output per litre		kW/ltr	83.4
Acceleration	0–100 km/h	s	4.4
in 5th gear	80–120 km/h	s	–
Top speed		km/h	250
BMW EfficientDynamics			
BMW EfficientDynamics, standard features			Brake Energy Regeneration with recuperation display, Electric Power Steering (EPS), Auto Start Stop function, ECO PRO mode with coasting function, intelligent lightweight construction, optimised aerodynamic attributes, on-demand operation of ancillary units, map-controlled oil pump, differential and transfer case with optimised warm-up behaviour, tyres with reduced rolling resistance
Fuel consumption EU			
Urban		ltr/100 km	9.8
Extra-urban		ltr/100 km	6.0
Combined		ltr/100 km	7.4
CO_2		g/km	169
Emission rating			EU6

Specifications apply to ACEA markets; data relevant to homologation applicable in part only to Germany (weight)

[1] Height including roof aerial
[2] Oil change volume

The BMW 1 Series 3-door. 116d.

		BMW 116d 3-door
Body		
No. of doors/seats		3 / 4 (5)
Length/width/height [1] (unladen)	mm	4329 / 1765 / 1421
Wheelbase	mm	2690
Track, front/rear	mm	1535 / 1569
Ground clearance	mm	140
Turning circle	m	10.9
Fuel tank capacity	approx. ltr	52
Cooling system incl. heater	ltr	7.0
Engine oil [2]	ltr	4.4
Weight, unladen, to DIN/EU	kg	1320 / 1395 (1350 / 1425)
Max. load to DIN	kg	565
Max. permissible weight	kg	1885 (1915)
Max. axle load, front/rear	kg	885 / 1090
Max. trailer load (12%) braked/unbraked	kg	1500 / 690
Max. roof load/max towbar download	kg	75 / 75
Luggage comp. capacity	ltr	360 – 1200
Air resistance	C_d x A	0.30 x 2.14
Power Unit		
Config./No. of cyls./valves		in-line / 3 / 4
Engine technology		BMW TwinPower Turbo technology: turbocharger with variable inlet geometry, common rail direct injection with solenoid valve injectors, max. injection pressure: 2,000 bar
Effective capacity	cc	1496
Stroke/bore	mm	90.0 / 84.0
Compression ratio	:1	16.5
Fuel		diesel
Max. output	kW/hp	85 / 116
at	rpm	4000
Max torque	Nm	270
at	rpm	1750 – 2250
Electrical System		
Battery/installation	Ah/–	90 / luggage comp.
Alternator	A/W	180 / 2520
Driving Dynamics and Safety		
Suspension, front		Aluminium double-joint spring strut axle
Suspension, rear		Five-link axle in lightweight steel construction with double elastic bearing
Brakes, front		Single-piston floating-calliper disc brakes
Brakes, rear		Single-piston floating-calliper disc brakes
Driving stability systems		Standard: DSC incl. ABS, ASC and DTC (Dynamic Traction Control), CBC (Cornering Brake Control), DBC (Dynamic Brake Control), Dry Braking function, Fading Compensation, Start-Off Assistant
Safety equipment		Standard: airbags for driver and front passenger, side airbags for driver and front passenger, head airbags front and rear, three-point inertia-reel seatbelts on all seats with belt tensioner and belt force limiter at the front, crash sensors, Tyre Defect Indicator
Steering		Electric Power Steering (EPS), optional: Servotronic function, variable sport steering
Steering ratio, overall	:1	15.0
Tyres, front/rear		195/55 R16 87H
Rims, front/rear		6.5J x 16 steel

			BMW 116d 3-door
Transmission			
Type of transmission			6-speed manual (optional: 8-speed Steptronic transmission)
Gear ratios	I	:1	4.002 (4.714)
	II	:1	2.109 (3.143)
	III	:1	1.380 (2.106)
	IV	:1	1.000 (1.667)
	V	:1	0.781 (1.285)
	VI	:1	0.603 (1.000)
	VII	:1	– (0.839)
	VIII	:1	– (0.667)
	R	:1	3.647 (3.295)
Final drive		:1	3.077 (2.647)
Performance			
Power-to-weight ratio (DIN)		kg/kW	15.5 (15.9)
Output per litre		kW/ltr	56.8
Acceleration	0–100 km/h	s	10.3 (10.3)
in 5th gear	80–120 km/h	s	11.7
Top speed		km/h	200 (200)
BMW EfficientDynamics			
BMW EfficientDynamics standard features			Brake Energy Regeneration with recuperation display, Electric Power Steering (EPS), Auto Start Stop function, Optimum Gearshift Indicator, ECO PRO mode with coasting function (automatic), intelligent lightweight construction, optimised aerodynamic attributes, on-demand operation of ancillary units, map-controlled oil pump, differential with optimised warm-up behaviour, tyres with reduced rolling resistance
Fuel Consumption EU [3]			
With standard tyres, rims 7J x 16 and tyres 205/55 R16 as well as winter tyres			
Urban		ltr/100 km	4.3 (4.1)
Extra-urban		ltr/100 km	3.3 (3.4)
Combined		ltr/100 km	3.7 (3.6)
CO_2		g/km	97 (96)
With rims 7J x 17 and tyres 205/50 R17, with rims 7.5J x 17 and tyres 225/45 R 17, with rims 7.5J x 17 front, 8J x 17 rear and tyres 225/45 R17 front, 245/40 R17 rear			
Urban		ltr/100 km	4.7 (4.4)
Extra-urban		ltr/100 km	3.6 (3.6)
Combined		ltr/100 km	4.0 (3.9)
CO_2		g/km	104 (103)
With rims 7.5J x 18 front, 8J x 18 rear and tyres 225/40 R18 front, 245/35 R18 rear			
Urban		ltr/100 km	4.8 (4.6)
Extra-urban		ltr/100 km	3.7 (3.8)
Combined		ltr/100 km	4.1 (4.1)
CO_2		g/km	107 (107)
Emission rating			EU6

Specifications apply to ACEA markets/data relevant to homologation apply in part only to Germany (weight)
Figures in brackets apply to automatic transmission

[1] Height with roof fin: 1440 mm
[2] Oil change
[3] Fuel consumption and CO_2 emission figures depend on the selected tyre format

The BMW 1 Series 3-door. 116d EfficientDynamics Edition.

		BMW 116d EfficientDynamics Edition 3-door
Body		
No. of doors/seats		3 / 4 (5)
Length/width/height [1] (unladen)	mm	4329 / 1765 / 1413
Wheelbase	mm	2690
Track, front/rear	mm	1523 / 1558
Ground clearance	mm	132
Turning circle	m	10.9
Fuel tank capacity	approx. ltr	52
Cooling system incl. heater	ltr	7.0
Engine oil [2]	ltr	4.4
Weight, unladen, to DIN/EU	kg	1320 / 1395
Max. load to DIN	kg	565
Max. permissible weight	kg	1885
Max. axle load, front/rear	kg	855 / 1090
Max. trailer load (12%) braked/unbraked	kg	– / –
Max. roof load/max towbar download	kg	75 / –
Luggage comp. capacity	ltr	360 – 1200
Air resistance	C_d x A	0.29 x 2.14
Power Unit		
Config./No. of cyls./valves		in-line / 3 / 4
Engine technology		BMW TwinPower Turbo technology: turbocharger with variable inlet geometry, common rail direct injection with solenoid valve injectors, max. injection pressure: 2,000 bar
Effective capacity	cc	1496
Stroke/bore	mm	90.0 / 84.0
Compression ratio	:1	16.5
Fuel		diesel
Max. output	kW/hp	85 / 116
at	rpm	4000
Max torque	Nm	270
at	rpm	1750 – 2250
Electrical System		
Battery/installation	Ah/–	90 / luggage comp.
Alternator	A/W	180 / 2520
Driving Dynamics and Safety		
Suspension, front		Aluminium double-joint spring strut axle
Suspension, rear		Five-link axle in lightweight steel construction with double elastic bearing
Brakes, front		Single-piston floating-calliper disc brakes
Brakes, rear		Single-piston floating-calliper disc brakes
Driving stability systems		Standard: DSC incl. ABS, ASC and DTC (Dynamic Traction Control), CBC (Cornering Brake Control), DBC (Dynamic Brake Control), Dry Braking function, Fading Compensation, Start-Off Assistant
Safety equipment		Standard: airbags for driver and front passenger, side airbags for driver and front passenger, head airbags front and rear, three-point inertia-reel seatbelts on all seats with belt tensioner and belt force limiter at the front, crash sensors, Tyre Defect Indicator
Steering		Electric Power Steering (EPS), optional: Servotronic function, variable sport steering
Steering ratio, overall	:1	15.0
Tyres, front/rear		205/55 R16 91V
Rims, front/rear		7J x 16 steel

			BMW 116d EfficientDynamics Edition 3-door
Transmission			
Type of transmission			6-speed manual
Gear ratios	I	:1	4.002
	II	:1	2.109
	III	:1	1.380
	IV	:1	1.000
	V	:1	0.781
	VI	:1	0.603
	R	:1	3.647
Final drive		:1	2.929
Performance			
Power-to-weight ratio (DIN)		kg/kW	15.5
Output per litre		kW/ltr	56.8
Acceleration	0–100 km/h	s	10.4
in 5th gear	80–120 km/h	s	12.9
Top speed		km/h	195
BMW EfficientDynamics			
BMW EfficientDynamics standard features			Brake Energy Regeneration with recuperation display, Electric Power Steering (EPS), Auto Start Stop function, Optimum Gearshift Indicator, ECO PRO mode, intelligent lightweight construction, optimised aerodynamic attributes, on-demand operation of ancillary units, map-controlled oil pump, differential with optimised warm-up behaviour, tyres with reduced rolling resistance
Fuel Consumption EU [3]			
With standard tyres			
Urban		ltr/100 km	3.9
Extra-urban		ltr/100 km	3.1
Combined		ltr/100 km	3.4
CO_2		g/km	89
With rims 7J x 17 and tyres 205/50 R17, with rims 7.5J x 17 and tyres 225/45 R 17, with rims 7.5J x 17 front, 8J x 17 rear and tyres 225/45 R17 front, 245/40 R17 rear as well as winter tyres			
Urban		ltr/100 km	4.3
Extra-urban		ltr/100 km	3.4
Combined		ltr/100 km	3.7
CO_2		g/km	98
With rims 7.5J x 18 front, 8J x 18 rear and tyres 225/40 R18 front, 245/35 R18 rear			
Urban		ltr/100 km	4.4
Extra-urban		ltr/100 km	3.5
Combined		ltr/100 km	3.8
CO_2		g/km	101
Emission rating			EU6

Specifications apply to ACEA markets/data relevant to homologation apply in part only to Germany (weight)

[1] Height with roof fin: 1432 mm
[2] Oil change
[3] Fuel consumption and CO_2 emission figures depend on the selected tyre format

The BMW 1 Series 3-door. 118d, 118d xDrive.

		BMW 118d 3-door	BMW 118d xDrive 3-door
Body			
No. of doors/seats		3 / 4 (5)	3 / 4 (5)
Length/width/height [1] (unladen)	mm	4329 / 1765 / 1421	4329 / 1765 / 1421
Wheelbase	mm	2690	2690
Track, front/rear	mm	1535 / 1569	1522 / 1556
Ground clearance	mm	140	140
Turning circle	m	10.9	11.3
Fuel tank capacity	approx. ltr	52	52
Cooling system incl. heater	ltr	7.0	7.0
Engine oil [2]	ltr	5.0	5.0
Weight, unladen, to DIN/EU	kg	1350 / 1425 (1375 / 1450)	1420 / 1495
Max. load to DIN	kg	565	550
Max. permissible weight	kg	1915 (1940)	1970
Max. axle load, front/rear	kg	900 / 1090	940 / 1090
Max. trailer load (12%) braked/unbraked	kg	1500 / 690	1500 / 710
Max. roof load/max towbar download	kg	75 / 75	75 / 75
Luggage comp. capacity	ltr	360 – 1200	360 – 1200
Air resistance	C_d x A	0.30 x 2.14	0.31 x 2.14
Power Unit			
Config./No. of cyls./valves		in-line / 4 / 4	in-line / 4 / 4
Engine technology		BMW TwinPower Turbo technology: turbocharger with variable inlet geometry, common rail direct injection with solenoid valve injectors, max. injection pressure: 2,000 bar	
Effective capacity	cc	1995	1995
Stroke/bore	mm	90.0 / 84.0	90.0 / 84.0
Compression ratio	:1	16.5	16.5
Fuel		diesel	diesel
Max. output	kW/hp	110 / 150	110 / 150
at	rpm	4000	4000
Max torque	Nm	320	320
at	rpm	1500 – 3000	1500 – 3000
Electrical System			
Battery/installation	Ah/–	90 / luggage comp.	90 / luggage comp.
Alternator	A/W	150 / 2100	150 / 2100
Driving Dynamics and Safety			
Suspension, front		Aluminium double-joint spring strut axle	
Suspension, rear		Five-link axle in lightweight steel construction with double elastic bearing	
Brakes, front		Single-piston floating-calliper disc brakes	
Brakes, rear		Single-piston floating-calliper disc brakes	
Driving stability systems		Standard: DSC incl. ABS, ASC and DTC (Dynamic Traction Control), CBC (Cornering Brake Control), DBC (Dynamic Brake Control), Dry Braking function, Fading Compensation, Start-Off Assistant; BMW 118d xDrive: linked to xDrive all-wheel-drive system in Integrated Chassis Management (ICM)	
Safety equipment		Standard: airbags for driver and front passenger, side airbags for driver and front passenger, head airbags front and rear, three-point inertia-reel seatbelts on all seats with belt tensioner and belt force limiter at the front, crash sensors, Tyre Defect Indicator	
Steering		Electric Power Steering (EPS), optional: Servotronic function, variable sport steering	
Steering ratio, overall	:1	15.0	15.1
Tyres, front/rear		195/55 R16 87W	205/55 R16 91V
Rims, front/rear		6.5J x 16 steel	7J x 16 steel

			BMW 118d 3-door	BMW 118d xDrive 3-door
Transmission				
Type of transmission			6-speed manual (optional: 8-speed Steptronic transmission)	6-speed manual
Gear ratios	I	:1	4.002 (5.000)	4.110
	II	:1	2,109 (3,200)	2.248
	III	:1	1.396 (2.143)	1.403
	IV	:1	1.000 (1.720)	1.000
	V	:1	0.781 (1.314)	0.802
	VI	:1	0.668 (1.000)	0.659
	VII	:1	– (0.822)	–
	VIII	:1	– (0.640)	–
	R	:1	3.647 (3.456)	3.727
Final drive		:1	3.077 (2.647)	3.154
Performance				
Power-to-weight ratio (DIN)		kg/kW	12.3 (12.5)	12.9
Output per litre		kW/ltr	55.1	55.1
Acceleration	0–100 km/h	s	8.3 (8.1)	8.4
in 5th gear	80–120 km/h	s	9.2 (–)	9.5
Top speed		km/h	212 (212)	210
BMW EfficientDynamics				
BMW EfficientDynamics standard features			Brake Energy Regeneration with recuperation display, Electric Power Steering (EPS), Auto Start Stop function, Optimum Gearshift Indicator, ECO PRO mode with coasting function (automatic), intelligent lightweight construction, optimised aerodynamic attributes, on-demand operation of ancillary units, map-controlled oil pump, differential with optimised warm-up behaviour, efficiency- and weight-optimised transfer case (BMW 118d xDrive), tyres with reduced rolling resistance	
Fuel Consumption EU [3]				
With standard tyres				
Urban		ltr/100 km	4.8 (4.5)	5.1
Extra-urban		ltr/100 km	3.5 (3.4)	3.8
Combined		ltr/100 km	4.0 (3.8)	4.3
CO_2		g/km	104 (99)	113
With rims 7J x 16 and tyres 205/55 R16 (BMW 118d), with rims 7J x 17 and tyres 205/50 R17, with rims 7.5J x 17 and tyres 225/45 R 17 as well as winter tyres, with rims 7.5J x 17 front, 8J x 17 rear and tyres 225/45 R17 front, 245/40 R17 rear				
Urban		ltr/100 km	5.0 (4.7)	5.4
Extra-urban		ltr/100 km	3.6 (3.6)	4.0
Combined		ltr/100 km	4.1 (4.0)	4.5
CO_2		g/km	109 (105)	119
With rims 7.5J x 18 front, 8J x 18 rear and tyres 225/40 R18 front, 245/35 R18 rear				
Urban		ltr/100 km	5.2 (4.9)	5.6
Extra-urban		ltr/100 km	3.8 (3.8)	4.1
Combined		ltr/100 km	4.3 (4.2)	4.7
CO_2		g/km	114 (110)	123
Emission rating			EU6	EU6

Specifications apply to ACEA markets/data relevant to homologation apply in part only to Germany (weight)
BMW 118d: figures in brackets apply to automatic transmission

[1] Height with roof fin: 1440 mm
[2] Oil change
[3] Fuel consumption and CO_2 emission figures depend on the selected tyre format

The BMW 1 Series 3-door. 120d, 120d xDrive.

		BMW 120d 3-door	BMW 120d xDrive 3-door
Body			
No. of doors/seats		3 / 4 (5)	3 / 4 (5)
Length/width/height [1] (unladen)	mm	4329 / 1765 / 1421	4329 / 1765 / 1421
Wheelbase	mm	2690	2690
Track, front/rear	mm	1521 / 1556	1522 / 1556
Ground clearance	mm	140	140
Turning circle	m	10.9	11.3
Fuel tank capacity	approx. ltr	52	52
Cooling system incl. heater	ltr	7.0	7.0
Engine oil [2]	ltr	5.0	5.0
Weight, unladen, to DIN/EU	kg	1370 / 1445 (1385 / 1460)	1450 / 1525
Max. load to DIN	kg	565	550
Max. permissible weight	kg	1935 (1950)	2000
Max. axle load, front/rear	kg	900 / 1090	975 / 1090
Max. trailer load (12%) braked/unbraked	kg	1500 / 710	1500 / 750
Max. roof load/max towbar download	kg	75 / 75	75 / 75
Luggage comp. capacity	ltr	360 – 1200	360 – 1200
Air resistance	C_d x A	0.30 x 2.14	0.31 x 2.14
Power Unit			
Config./No. of cyls./valves		in-line / 4 / 4	in-line / 4 / 4
Engine technology		BMW TwinPower Turbo technology: turbocharger with variable inlet geometry, common rail direct injection with solenoid valve injectors, max. injection pressure: 2,000 bar	
Effective capacity	cc	1995	1995
Stroke/bore	mm	90.0 / 84.0	90.0 / 84.0
Compression ratio	:1	16.5	16.5
Fuel		diesel	diesel
Max. output	kW/hp	140 / 190	140 / 190
at	rpm	4000	4000
Max torque	Nm	400	400
at	rpm	1750 – 2500	1750 – 2500
Electrical System			
Battery/installation	Ah/–	90 / luggage comp.	90 / luggage comp.
Alternator	A/W	150 / 2100	150 / 2100
Driving Dynamics and Safety			
Suspension, front		Aluminium double-joint spring strut axle	
Suspension, rear		Five-link axle in lightweight steel construction with double elastic bearing	
Brakes, front		Single-piston floating-calliper disc brakes	
Brakes, rear		Single-piston floating-calliper disc brakes	
Driving stability systems		Standard: DSC incl. ABS, ASC and DTC (Dynamic Traction Control), CBC (Cornering Brake Control), DBC (Dynamic Brake Control), Dry Braking function, Fading Compensation, Start-Off Assistant; BMW 120d xDrive: linked to xDrive all-wheel-drive system in Integrated Chassis Management (ICM)	
Safety equipment		Standard: airbags for driver and front passenger, side airbags for driver and front passenger, head airbags front and rear, three-point inertia-reel seatbelts on all seats with belt tensioner and belt force limiter at the front, crash sensors, Tyre Defect Indicator	
Steering		Electric Power Steering (EPS), optional: Servotronic function, variable sport steering	
Steering ratio, overall	:1	15.0	15.1
Tyres, front/rear		205/55 R16 91V	205/55 R16 91V
Rims, front/rear		7J x 16 steel	7J x 16 steel

			BMW 120d 3-door	BMW 120d xDrive 3-door
Transmission				
Type of transmission			6-speed manual (optional: 8-speed Steptronic transmission)	8-speed Steptronic transmission
Gear ratios	I	:1	4.110 (5.000)	5.000
	II	:1	2.248 (3.200)	3.200
	III	:1	1.403 (2.143)	2.143
	IV	:1	1.000 (1.720)	1.720
	V	:1	0.802 (1.314)	1.314
	VI	:1	0.659 (1.000)	1.000
	VII	:1	– (0.822)	0.822
	VIII	:1	– (0.640)	0.640
	R	:1	3.727 (3.456)	3.456
Final drive		:1	3.077 (2.647)	2.647
Performance				
Power-to-weight ratio (DIN)		kg/kW	9.8 (9.9)	10.4
Output per litre		kW/ltr	70.2	70.2
Acceleration	0–100 km/h	s	7.1 (7.0)	6.8
in 5th gear	80–120 km/h	s	7.2 (–)	–
Top speed		km/h	228 (228)	222
BMW EfficientDynamics				
BMW EfficientDynamics standard features			Brake Energy Regeneration with recuperation display, Electric Power Steering (EPS), Auto Start Stop function, Optimum Gearshift Indicator, ECO PRO mode with coasting function (automatic), intelligent lightweight construction, optimised aerodynamic attributes, on-demand operation of ancillary units, map-controlled oil pump, differential with optimised warm-up behaviour, efficiency- and weight-optimised transfer case (BMW 120d xDrive), tyres with reduced rolling resistance	
Fuel Consumption EU [3]				
With standard tyres				
Urban		ltr/100 km	5.0 (4.6)	5.1
Extra-urban		ltr/100 km	3.6 (3.5)	3.9
Combined		ltr/100 km	4.1 (3.9)	4.3
CO_2		g/km	108 (103)	113
With rims 7J x 17 and tyres 205/50 R17, with rims 7.5J x 17 and tyres 225/45 R 17 as well as winter tyres, with rims 7.5J x 17 front, 8J x 17 rear and tyres 225/45 R17 front, 245/40 R17 rear				
Urban		ltr/100 km	5.3 (4.9)	5.3
Extra-urban		ltr/100 km	3.7 (3.7)	4.1
Combined		ltr/100 km	4.3 (4.1)	4.5
CO_2		g/km	114 (109)	119
With rims 7.5J x 18 front, 8J x 18 rear and tyres 225/40 R18 front, 245/35 R18 rear				
Urban		ltr/100 km	5.5 (5.1)	5.5
Extra-urban		ltr/100 km	3.9 (3.9)	4.3
Combined		ltr/100 km	4.5 (4.3)	4.7
CO_2		g/km	118 (114)	124
Emission rating			EU6	EU6

Specifications apply to ACEA markets/data relevant to homologation apply in part only to Germany (weight)
BMW 120d: figures in brackets apply to automatic transmission (standard in the BMW 120d xDrive)

[1] Height with roof fin: 1440 mm
[2] Oil change
[3] Fuel consumption and CO_2 emission figures depend on the selected tyre format

The BMW 1 Series 3-door. 125d.

		BMW 125d 3-door
Body		
No. of doors/seats		3 / 4 (5)
Length/width/height [1] (unladen)	mm	4329 / 1765 / 1421
Wheelbase	mm	2690
Track, front/rear	mm	1521 / 1556
Ground clearance	mm	140
Turning circle	m	10.9
Fuel tank capacity	approx. ltr	52
Cooling system incl. heater	ltr	7.0
Engine oil [2]	ltr	5.0
Weight, unladen, to DIN/EU	kg	1425 / 1500
Max. load to DIN	kg	565
Max. permissible weight	kg	1990
Max. axle load, front/rear	kg	940 / 1090
Max. trailer load (12%) braked/unbraked	Kg	1500 / 740
Max. roof load/max towbar download	kg	75 / 75
Luggage comp. capacity	ltr	360 – 1200
Air resistance	C_d x A	0.31 x 2.14
Power Unit		
Config./No. of cyls./valves		in-line / 4 / 4
Engine technology		BMW TwinPower Turbo technology: multi-stage charging, high- and low-pressure turbocharger with variable inlet geometry, common rail direct injection with solenoid valve injectors, max. injection pressure: 2,500 bar
Effective capacity	cc	1995
Stroke/bore	mm	90.0 / 84.0
Compression ratio	:1	16.5
Fuel		diesel
Max. output	kW/hp	165 / 224
at	rpm	4400
Max torque	Nm	450
at	rpm	1500 – 3000
Electrical System		
Battery/installation	Ah/–	90 / luggage comp.
Alternator	A/W	150 / 2100
Driving Dynamics and Safety		
Suspension, front		Aluminium double-joint spring strut axle
Suspension, rear		Five-link axle in lightweight steel construction with double elastic bearing
Brakes, front		Single-piston floating-calliper disc brakes
Brakes, rear		Single-piston floating-calliper disc brakes
Driving stability systems		Standard: DSC incl. ABS, ASC and DTC (Dynamic Traction Control), CBC (Cornering Brake Control), DBC (Dynamic Brake Control), Dry Braking function, Fading Compensation, Start-Off Assistant
Safety equipment		Standard: airbags for driver and front passenger, side airbags for driver and front passenger, head airbags front and rear, three-point inertia-reel seatbelts on all seats with belt tensioner and belt force limiter at the front, crash sensors, Tyre Defect Indicator
Steering		Electric Power Steering (EPS), optional: Servotronic function, variable sport steering
Steering ratio, overall	:1	15.0
Tyres, front/rear		205/50 R17 89Y
Rims, front/rear		7J x 17 light-alloy

			BMW 125d 3-door
Transmission			
Type of transmission			8-speed Steptronic transmission
Gear ratios	I	:1	5.000
	II	:1	3.200
	III	:1	2.143
	IV	:1	1.720
	V	:1	1.314
	VI	:1	1.000
	VII	:1	0.822
	VIII	:1	0.640
	R	:1	3.456
Final drive		:1	2.647
Performance			
Power-to-weight ratio (DIN)		kg/kW	8.6
Output per litre		kW/ltr	82.7
Acceleration	0–100 km/h	s	6.3
in 5th gear	80–120 km/h	s	–
Top speed		km/h	240
BMW EfficientDynamics			
BMW EfficientDynamics standard features			Brake Energy Regeneration with recuperation display, Electric Power Steering (EPS), Auto Start Stop function, ECO PRO mode with coasting function, intelligent lightweight construction, optimised aerodynamic attributes, on-demand operation of ancillary units, map-controlled oil pump, differential with optimised warm-up behaviour, tyres with reduced rolling resistance
Fuel Consumption EU [3)]			
With standard tyres			
Urban		ltr/100 km	5.1
Extra-urban		ltr/100 km	3.9
Combined		ltr/100 km	4.3
CO_2		g/km	114
With rims 7.5J x 17 and tyres 225/45 R 17 as well as winter tyres, with rims 7.5J x 17 front, 8J x 17 rear and tyres 225/45 R17 front, 245/40 R17 rear, with rims 7.5J x 18 front, 8J x 18 rear and tyres 225/40 R18 front, 245/35 R18 rear			
Urban		ltr/100 km	5.4
Extra-urban		ltr/100 km	4.1
Combined		ltr/100 km	4.6
CO_2		g/km	121
Emission rating			EU6

Specifications apply to ACEA markets/data relevant to homologation apply in part only to Germany (weight)

[1)] Height with roof fin: 1440 mm
[2)] Oil change
[3)] Fuel consumption and CO_2 emission figures depend on the selected tyre format

The BMW 1 Series 5-door. 116i.

		BMW 116i 5-door
Body		
No. of doors/seats		5 / 5
Length/width/height [1] (unladen)	mm	4329 / 1765 / 1421
Wheelbase	mm	2690
Track, front/rear	mm	1535 / 1569
Ground clearance	mm	140
Turning circle	m	10.9
Fuel tank capacity	approx. ltr	52
Cooling system incl. heater	ltr	7.7
Engine oil [2]	ltr	4.25
Weight, unladen, to DIN/EU	kg	1305 / 1380
Max. load to DIN	kg	565
Max. permissible weight	kg	1870
Max. axle load, front/rear	kg	850 / 1090
Max. trailer load (12%) braked/unbraked	kg	1200 / 650
Max. roof load/max towbar download	kg	75 / 75
Luggage comp. capacity	ltr	360 – 1200
Air resistance	C_d x A	0.31 x 2.14
Power Unit		
Config./No. of cyls./valves		in-line / 3 / 4
Engine technology		BMW TwinPower Turbo technology: turbocharger, High Precision Direct Injection, fully variable valve control (VALVETRONIC), Double-VANOS variable camshaft control
Effective capacity	cc	1499
Stroke/bore	mm	94.6 / 82.0
Compression ratio	:1	11.0
Fuel		min RON 91
Max. output	kW/hp	80 / 109
at	rpm	4250
Max torque	Nm	180
at	rpm	1250–4250
Electrical System		
Battery/installation	Ah/–	90 / luggage comp.
Alternator	A/W	180 / 2520
Driving Dynamics and Safety		
Suspension, front		Aluminium double-joint spring strut axle
Suspension, rear		Five-link axle in lightweight steel construction with double elastic bearing
Brakes, front		Single-piston floating-calliper disc brakes
Brakes, rear		Single-piston floating-calliper disc brakes
Driving stability systems		Standard: DSC incl. ABS, ASC and DTC (Dynamic Traction Control), CBC (Cornering Brake Control), DBC (Dynamic Brake Control), Dry Braking function, Fading Compensation, Start-Off Assistant
Safety equipment		Standard: airbags for driver and front passenger, side airbags for driver and front passenger, head airbags front and rear, three-point inertia-reel seatbelts on all seats with belt tensioner and belt force limiter at the front, crash sensors, Tyre Defect Indicator
Steering		Electric Power Steering (EPS), optional: Servotronic function, variable sport steering
Steering ratio, overall	:1	15.0
Tyres, front/rear		195/55 R16 87H
Rims, front/rear		6.5J x 16 steel

			BMW 116i 5-door
Transmission			
Type of transmission			6-speed manual
Gear ratios	I	:1	4.552
	II	:1	2.548
	III	:1	1.659
	IV	:1	1.230
	V	:1	1.000
	VI	:1	0.830
	R	:1	4.138
Final drive		:1	2.813
Performance			
Power-to-weight ratio (DIN)		kg/kW	16.3
Output per litre		kW/ltr	53.4
Acceleration	0–100 km/h	s	10.9
in 5th gear	80–120 km/h	s	14.8
Top speed		km/h	195
BMW EfficientDynamics			
BMW EfficientDynamics standard features			Brake Energy Regeneration with recuperation display, Electric Power Steering (EPS), Auto Start Stop function, Optimum Gearshift Indicator, ECO PRO mode, intelligent lightweight construction, optimised aerodynamic attributes, on-demand operation of ancillary units, map-controlled oil pump, differential with optimised warm-up behaviour, tyres with reduced rolling resistance
Fuel Consumption EU [3)]			
With standard tyres, rims 7J x 16 and tyres 205/55 R16 as well as winter tyres			
Urban		ltr/100 km	6.3
Extra-urban		ltr/100 km	4.2
Combined		ltr/100 km	5.0
CO_2		g/km	116
With rims 7J x 17 and tyres 205/50 R17, with rims 7.5J x 17 and tyres 225/45 R 17, with rims 7.5J x 17 front, 8J x 17 rear and tyres 225/45 R17 front, 245/40 R17 rear			
Urban		ltr/100 km	6.7
Extra-urban		ltr/100 km	4.5
Combined		ltr/100 km	5.3
CO_2		g/km	123
With rims 7.5J x 18 front, 8J x 18 rear and tyres 225/40 R18 front, 245/35 R18 rear			
Urban		ltr/100 km	6.8
Extra-urban		ltr/100 km	4.6
Combined		ltr/100 km	5.4
CO_2		g/km	126
Emission rating			EU6

Specifications apply to ACEA markets/data relevant to homologation apply in part only to Germany (weight)
[1)] Height with roof fin: 1440 mm
[2)] Oil change
[3)] Fuel consumption and CO_2 emission figures depend on the selected tyre format

The BMW 1 Series 5-door. 118i.

		BMW 118i 5-door
Body		
No. of doors/seats		5 / 5
Length/width/height [1] (unladen)	mm	4329 / 1765 / 1421
Wheelbase	mm	2690
Front/rear track	mm	1535 / 1569
Ground clearance	mm	140
Turning circle	m	10.9
Fuel capacity	approx. l	52
Engine oil capacity [2]	l	4.25
Weight, unladen (DIN/EU)	kg	1305 / 1380 (1320 / 1395)
Payload (DIN)	kg	565
Max. permissible weight	kg	1870 (1885)
Max. axle load, front/rear	kg	865 / 1090
Max. trailer load (12%) braked/unbraked	kg	1300 / 650
Max. roof load/max towbar download	kg	75 / 75
Luggage comp. capacity	l	360 – 1200
Air resistance	Cd x A	0.31 x 2.14
Engine		
Type/no. of cylinders/valves		in-line / 3 / 4
Engine technology		BMW TwinPower Turbo technology: turbocharger, direct injection system High Precision Injection, fully variable valve control (VALVETRONIC) and double VANOS variable camshaft timing
Effective capacity	cc	1499
Stroke/bore	mm	94.6 / 82.0
Compression ratio	:1	11.0
Fuel type		min. RON 91
Output	kW/hp	100 / 136
at rpm		4400
Torque	Nm	220
at rpm		1250 – 4300
Electrical		
Battery charge/location	Ah/–	90 / luggage compartment
Alternator current/output	A/W	180 / 2520
Driving Dynamics and Safety		
Front suspension		Aluminium double-joint spring strut axle
Rear suspension		Five-link axle in lightweight steel construction with double elastic bearing
Front brakes		Single-piston floating-calliper disc brakes
Rear brakes		Single-piston floating-calliper disc brakes
Driving stability systems		Standard: DSC incl. ABS, ASC and DTC (Dynamic Traction Control), CBC Cornering Brake Control, DBC Dynamic Brake Control, Dry Braking function, Fading Compensation, Start-Off Assistant
Safety equipment		Standard: driver and front-seat passenger airbags, driver and front-seat passenger side airbags, head airbags front and rear, three-point automatic seatbelts for all seats, seatbelt tensioners and seatbelt force limiters in front seats, crash sensors, Tyre Defect Indicator
Steering		Electromechanical rack-and-pinion power steering (EPS); optional: Servotronic function, variable sport steering
Overall steering ratio	:1	15.0
Front/rear tyres		195/55 R16 87H
Front/rear wheels		6.5J x 16 steel

			BMW 118i 5-door
Transmission			
Type of gearbox			6-speed manual (optional: 8-speed Steptronic)
Gear ratios	I	:1	4.552 (4.714)
	II	:1	2.548 (3.143)
	III	:1	1.659 (2.106)
	IV	:1	1.230 (1.667)
	V	:1	1.000 (1.285)
	VI	:1	0.830 (1.000)
	VII	:1	– (0.839)
	VIII	:1	– (0.667)
	R	:1	4.138 (3.295)
Final drive		:1	2.813 (3.077)
Performance			
Weight-to-power ratio (DIN unladen)		kg/kW	13.1 (13.2)
Specific power output		kW/l	66.7
Acceleration	0–100 km/h	sec.	8.5 (8.7)
in 5th gear	80–120 km/h	sec.	10.6 (–)
Max. speed		km/h	210 (210)
BMW EfficientDynamics			
BMW EfficientDynamics Features included as standard			Brake Energy Regeneration with recuperation display, electric power steering (EPS), Auto Start Stop function, gear shift indicator, ECO PRO mode with coasting function (automatic), intelligent lightweight construction, optimised aerodynamic attributes, on-demand operation of ancillary units, map-controlled oil pump, differential with optimised warm-up behaviour, tyres with reduced rolling resistance
Fuel consumption (EU) [3]			
with standard wheels and tyres, with 7J x 16" rims and 205/55 R16 tyres and with winter tyres			
Urban		l/100 km	6.2 (5.9)
Extra-urban		l/100 km	4.3 (4.2)
Total		l/100 km	5.0 (4.8)
CO_2 emissions		g/km	116 (112)
with 7J x 17" rims and 205/50 R17 tyres, with 7.5J x 17" rims and 225/45 R17 tyres, with 7.5J x 17" front rims, 8J x 17" rear rims, 225/45 R17 front tyres and 245/40 R17 rear tyres			
Urban		l/100 km	6.5 (6.3)
Extra-urban		l/100 km	4.5 (4.5)
Combined		l/100 km	5.3 (5.1)
CO_2 emissions		g/km	123 (119)
with 7.5J x 18" front rims, 8J x 18" rear rims, 225/40 R18 front tyres and 245/35 R18 rear tyres			
Urban		l/100 km	6.7 (6.4)
Extra-urban		l/100 km	4.7 (4.6)
Total		l/100 km	5.4 (5.2)
CO_2 emissions		g/km	126 (122)
Emissions standard			EU6

Technical data valid for ACEA countries/Some permitted weights valid only for Germany
Figures in brackets are for vehicles with automatic transmission

[1] Height with roof aerial: 1440 mm
[2] Oil change volume
[3] Fuel consumption and CO_2 emissions depend on the selected tyre format

The BMW 1 Series 5-door. 120i, 125i.

		BMW 120i 5-door	BMW 125i 5-door
Body			
No. of doors/seats		5 / 5	5 / 5
Length/width/height [1] (unladen)	mm	4329 / 1765 / 1421	4329 / 1765 / 1421
Wheelbase	mm	2690	2690
Front/rear track	mm	1535 / 1569	1521 / 1556
Ground clearance	mm	140	140
Turning circle	m	10.9	10.9
Fuel capacity	approx. l	52	52
Engine oil capacity [2)]	l	5.25	5.25
Weight, unladen (DIN/EU)	kg	1370 / 1445 (1380 / 1455)	1400 / 1475
Payload (DIN)	kg	565	565
Max. permissible weight	kg	1930 (1940)	1965
Max. axle load, front/rear	kg	910 / 1090	920 / 1100
Max. trailer load (12%) braked/unbraked	kg	1500 / 670	1500 / 680
Max. roof load/max towbar download	kg	75 / 75	75 / 75
Luggage comp. capacity	l	360 – 1200	360 – 1200
Air resistance	Cd x A	0.31 x 2.14	0.32 x 2.14
Engine			
Type/no. of cylinders/valves		in-line / 4 / 4	in-line / 4 / 4
Engine technology		BMW TwinPower Turbo technology: twin-scroll turbocharger, direct injection system High Precision Injection, fully variable valve control (VALVETRONIC) and double VANOS variable camshaft timing	
Effective capacity	cc	1998	1998
Stroke/bore	mm	94.6 / 82.0	94.6 / 82.0
Compression ratio	:1	11.0	10.2
Fuel type		min RON 91	min RON 91
Output	kW/hp	135 / 184	165 / 224
at rpm		5000	5200
Torque	Nm	290	310
at rpm		1350 – 4250	1400 – 5000
Electrical			
Battery charge/location	Ah/–	80 / luggage compartment	80 / luggage compartment
Driving Dynamics and Safety			
Front suspension		Aluminium double-joint spring strut axle	
Rear suspension		Five-link axle in lightweight steel construction with double elastic bearing	
Front brakes		Single-piston floating-calliper disc brakes	
Rear brakes		Single-piston floating-calliper disc brakes	
Driving stability systems		Standard: DSC incl. ABS, ASC and DTC (Dynamic Traction Control), CBC Cornering Brake Control, DBC Dynamic Brake Control, Dry Braking function, Fading Compensation, Start-Off Assistant	
Safety equipment		Standard: airbags for driver and front passenger, side airbags for driver and front passenger, head airbags front and rear, three-point inertia-reel seatbelts on all seats with belt tensioner and belt force limiter at the front, crash sensors, Tyre Defect Indicator	
Steering		Electromechanical rack-and-pinion power steering (EPS); optional: Servotronic function, variable sport steering	
Overall steering ratio	:1	15.0	15.0
Front/rear tyres		195/55 R16 87W	205/50 R17 91W
Front/rear wheels		6.5J x 16 steel	7J x 17 light-alloy

			BMW 120i 5-door	BMW 125i 5-door
Transmission				
Type of gearbox			6-speed manual (optional: 8-speed Steptronic)	8-speed Steptronic
Gear ratios	I	:1	4.002 (5.000)	5.000
	II	:1	2.130 (3.200)	3.200
	III	:1	1.396 (2.143)	2.143
	IV	:1	1.000 (1.720)	1.720
	V	:1	0.781 (1.314)	1.314
	VI	:1	0.668 (1.000)	1.000
	VII	:1	– (0.822)	0.822
	VIII	:1	– (0.640)	0.640
	R	:1	3.647 (3.456)	3.456
Final drive		:1	3.385 (2.813)	2.813
Performance				
Weight-to-power ratio (DIN unladen)		kg/kW	10.1 (10.2)	8.5
Specific power output		kW/l	67.6	82.6
Acceleration	0–100 km/h	sec	7.1 (7.1)	6.1
in 5th gear	80–120 km/h	sec	8.5 (–)	–
Max. speed		km/h	230 (225)	243
BMW EfficientDynamics				
BMW EfficientDynamics Features included as standard			Brake Energy Regeneration with recuperation display, electric power steering (EPS), Auto Start Stop function, gear shift indicator, ECO PRO mode with coasting function (automatic), intelligent lightweight construction, optimised aerodynamic attributes, on-demand operation of ancillary units, map-controlled oil pump, differential with optimised warm-up behaviour, tyres with reduced rolling resistance	
Fuel consumption (EU) [3]				
with standard wheels and tyres: 6.5J x 16" rims and 195/55 R16 tyres (BMW 120i), 7J x 17" rims and 205/50 R17 tyres (BMW 125i)				
Urban		l/100 km	7.6 (7.0)	7.2
Extra-urban		l/100 km	4.7 (4.7)	4.9
Total		l/100 km	5.7 (5.5)	5.7
CO_2 emissions		g/km	131 (126)	130
with 7J x 17" rims and 205/50 R17 tyres (BMW 120i), with 7.5J x 17 rims and 225/45 R 17 tyres, with 7.5J x 17" front rims, 8J x 17" rear rims and 225/45 R17 front tyres, 245/40 R17 rear tyres				
Urban		l/100 km	8.0 (7.4)	7.4
Extra-urban		l/100 km	4.9 (4.9)	5.0
Total		l/100 km	6.0 (5.8)	5.9
CO_2 emissions		g/km	138 (133)	134
with 7.5J x 18" front rims, 8J x 18" rear rims and 225/40 R18 front tyres, 245/35 R18 rear tyres and with winter tyres				
Urban		l/100 km	8.1 (7.4)	7.4
Extra-urban		l/100 km	5.0 (5.0)	5.0
Total		l/100 km	6.1 (5.9)	5.9
CO_2 emissions		g/km	140 (135)	134
Emissions standard			EU6	EU6

Technical data valid for ACEA countries/Some permitted weights valid only for Germany
BMW 120i: Figures in brackets are for vehicles with automatic transmission

[1] Height including roof aerial
[2] Oil change volume
[3] Fuel consumption and CO_2 emissions depend on the selected tyre format

The BMW 1 Series 5-door. M140i.

		BMW M140i 5-door
Body		
No. of doors/seats		5 / 5
Length/width/height[1] (unladen)	mm	4324 / 1765 / 1411
Wheelbase	mm	2690
Track, front/rear	mm	1516 / 1534
Ground clearance	mm	130
Turning circle	m	10.9
Tank capacity	approx. ltr	52
Engine oil[2]	ltr	6.5
Weight, unladen, to DIN/EU	kg	1450 / 1525 (1475 / 1550)
Max. load to DIN	kg	565
Max. permissible weight	kg	2015 (2040)
Max. axle load, front/rear	kg	970 / 1120
Max. trailer load (12%) braked/unbraked	kg	– / –
Max. roof load/towbar download	kg	75 / –
Luggage comp. capacity	ltr	360 – 1200
Air resistance	C_d x A	0.34 x 2.14
Engine		
Config./No. of cyls./valves		in-line / 6 / 4
Engine technology		M Performance TwinPower Turbo technology with twin-scroll turbocharger, High Precision Direct Injection, fully variable valve control (VALVETRONIC) and double-VANOS variable camshaft control
Effective capacity	cc	2998
Stroke/bore	mm	94.6 / 82.0
Compression ratio	:1	11.0
Fuel grade		min. RON 91
Output	kW/hp	250 / 340
at	rpm	5500
Torque	Nm	500
at	rpm	1520 – 4500
Electrical System		
Battery/Installation	Ah/–	80 / luggage comp.
Driving Dynamics and Safety		
Suspension, front		Aluminium double-joint spring strut axle with M-specific elastokinematics
Suspension, rear		Five-link axle in lightweight steel construction with double elastic bearing
Brakes, front		Four-piston fixed-calliper disc brakes
Brakes, rear		Two-piston fixed-calliper disc brakes
Driving stability systems		Standard: DSC incl. ABS, ASC and DTC (Dynamic Traction Control), CBC (Cornering Brake Control), DBC (Dynamic Brake Control), Dry Braking function, Fading Compensation, Start-Off Assistant
Safety equipment		Standard: airbags for driver and front passenger, side airbags for driver and front passenger, head airbags front and rear, three-point inertia-reel seatbelts on all seats with belt tensioner and belt force limiter at the front, crash sensors, Tyre Defect Indicator
Steering		Electric Power Steering (EPS), variable sport steering
Steering ratio, overall	:1	14.5
Tyres, front/rear		225/40 R18 88Y/ 245/35 R 18 92Y XL
Rims, front/rear		7.5J x 18 light-alloy/ 8J x 18 light-alloy

			BMW M140i 5-door
Transmission			
Type of gearbox			8-speed Steptronic Sport transmission
Gear ratios	I	:1	5.000
	II	:1	3.200
	III	:1	2.143
	IV	:1	1.720
	V	:1	1.314
	VI	:1	1.000
	VII	:1	0.822
	VIII	:1	0.640
	R	:1	3.456
Final drive		:1	2.813

Performance			
Power-to-weight ratio (DIN)		kg/kW	5.9
Output per litre		kW/ltr	83.4
Acceleration	0–100 km/h	s	4.6
in 5th gear	80–120 km/h	s	–
Top speed		km/h	250

BMW EfficientDynamics	
BMW EfficientDynamics, standard features	Brake Energy Regeneration with recuperation display, Electric Power Steering (EPS), Auto Start Stop function, Optimum Gearshift Indicator, ECO PRO mode with coasting function (automatic), intelligent lightweight construction, optimised aerodynamic attributes, on-demand operation of ancillary units, map-controlled oil pump, differential with optimised warm-up behaviour, tyres with reduced rolling resistance

Fuel consumption EU		
Urban	ltr/100 km	9.4
Extra-urban	ltr/100 km	5.8
Combined	ltr/100 km	7.1
CO_2	g/km	163
Emission rating		EU6

Specifications apply to ACEA markets; data relevant to homologation applicable in part only to Germany (weight)
Figures in brackets apply to automatic transmission

[1] Height including roof aerial
[2] Oil change volume

The BMW 1 Series 5-door. M140i xDrive.

		BMW M140i xDrive 5-door
Body		
No. of doors/seats		5 / 5
Length/width/height[1] (unladen)	mm	4324 / 1765 / 1411
Wheelbase	mm	2690
Track, front/rear	mm	1516 / 1534
Ground clearance	mm	130
Turning circle	m	11.3
Tank capacity	approx. ltr	52
Engine oil[2]	ltr	6.5
Weight, unladen, to DIN/EU	kg	1540 / 1615
Max. load to DIN	kg	550
Max. permissible weight	kg	2090
Max. axle load, front/rear	kg	1040 / 1120
Max. trailer load (12%) braked/unbraked	kg	– / –
Max. roof load/towbar download	kg	75 / –
Luggage comp. capacity	ltr	360 – 1200
Air resistance	C_d x A	0.35 x 2.14
Engine		
Config./No. of cyls./valves		in-line / 6 / 4
Engine technology		M Performance TwinPower Turbo technology with twin-scroll turbocharger, High Precision Direct Injection, fully variable valve control (VALVETRONIC) and double-VANOS variable camshaft control
Effective capacity	cc	2998
Stroke/bore	mm	94.6 / 82.0
Compression ratio	:1	11.0
Fuel grade		min. RON 91
Output	kW/hp	250 / 340
at	rpm	5500
Torque	Nm	500
at	rpm	1520 – 4500
Electrical System		
Battery/Installation	Ah/–	80 / luggage comp.
Driving Dynamics and Safety		
Suspension, front		Aluminium double-joint spring strut axle with M-specific elastokinematics
Suspension, rear		Five-link axle in lightweight steel construction with double elastic bearing
Brakes, front		Four-piston fixed-calliper disc brakes
Brakes, rear		Two-piston fixed-calliper disc brakes
Driving stability systems		Standard: DSC incl. ABS, ASC and DTC (Dynamic Traction Control), CBC (Cornering Brake Control), DBC (Dynamic Brake Control), Dry Braking function, Fading Compensation, Start-Off Assistant, linked to xDrive all-wheel-drive system in Integrated Chassis Management (ICM)
Safety equipment		Standard: airbags for driver and front passenger, side airbags for driver and front passenger, head airbags front and rear, three-point inertia-reel seatbelts on all seats with belt tensioner and belt force limiter at the front, crash sensors, Tyre Defect Indicator
Steering		Electric Power Steering (EPS), variable sport steering
Steering ratio, overall	:1	14.6
Tyres, front/rear		225/40 R18 88Y/ 245/35 R 18 92Y XL
Rims, front/rear		7.5J x 18 light-alloy/ 8J x 18 light-alloy

			BMW M140i xDrive 5-door
Transmission			
Type of gearbox			8-speed Steptronic Sport transmission
Gear ratios	I	:1	5.000
	II	:1	3.200
	III	:1	2.143
	IV	:1	1.720
	V	:1	1.314
	VI	:1	1.000
	VII	:1	0.822
	VIII	:1	0.640
	R	:1	3.456
Final drive		:1	2.813
Performance			
Power-to-weight ratio (DIN)		kg/kW	6.2
Output per litre		kW/ltr	83.4
Acceleration	0–100 km/h	s	4.4
in 5th gear	80–120 km/h	s	–
Top speed		km/h	250
BMW EfficientDynamics			
BMW EfficientDynamics, standard features			Brake Energy Regeneration with recuperation display, Electric Power Steering (EPS), Auto Start Stop function, ECO PRO mode with coasting function, intelligent lightweight construction, optimised aerodynamic attributes, on-demand operation of ancillary units, map-controlled oil pump, differential and transfer case with optimised warm-up behaviour, , tyres with reduced rolling resistance
Fuel consumption EU			
Urban		ltr/100 km	9.8
Extra-urban		ltr/100 km	6.0
Combined		ltr/100 km	7.4
CO_2		g/km	169
Emission rating			EU6

Specifications apply to ACEA markets; data relevant to homologation applicable in part only to Germany (weight)

[1] Height including roof aerial
[2] Oil change volume

The BMW 1 Series 5-door. 116d.

		BMW 116d 5-door
Body		
No. of doors/seats		5 / 5
Length/width/height [1] (unladen)	mm	4329 / 1765 / 1421
Wheelbase	mm	2690
Track, front/rear	mm	1535 / 1569
Ground clearance	mm	140
Turning circle	m	10.9
Fuel tank capacity	approx. ltr	52
Cooling system incl. heater	ltr	7.0
Engine oil [2]	ltr	4.4
Weight, unladen, to DIN/EU	kg	1320 / 1395 (1350 / 1425)
Max. load to DIN	kg	565
Max. permissible weight	kg	1885 (1915)
Max. axle load, front/rear	kg	885 / 1090
Max. trailer load (12%) braked/unbraked	kg	1500 / 690
Max. roof load/max towbar download	kg	75 / 75
Luggage comp. capacity	ltr	360 – 1200
Air resistance	C_d x A	0.30 x 2.14
Power Unit		
Config./No. of cyls./valves		in-line / 3 / 4
Engine technology		BMW TwinPower Turbo technology: turbocharger with variable inlet geometry, common rail direct injection with solenoid valve injectors, max. injection pressure: 2,000 bar
Effective capacity	cc	1496
Stroke/bore	mm	90.0 / 84.0
Compression ratio	:1	16.5
Fuel		diesel
Max. output	kW/hp	85 / 116
at	rpm	4000
Max torque	Nm	270
at	rpm	1750 – 2250
Electrical System		
Battery/installation	Ah/–	90 / luggage comp.
Alternator	A/W	180 / 2520
Driving Dynamics and Safety		
Suspension, front		Aluminium double-joint spring strut axle
Suspension, rear		Five-link axle in lightweight steel construction with double elastic bearing
Brakes, front		Single-piston floating-calliper disc brakes
Brakes, rear		Single-piston floating-calliper disc brakes
Driving stability systems		Standard: DSC incl. ABS, ASC and DTC (Dynamic Traction Control), CBC (Cornering Brake Control), DBC (Dynamic Brake Control), Dry Braking function, Fading Compensation, Start-Off Assistant
Safety equipment		Standard: airbags for driver and front passenger, side airbags for driver and front passenger, head airbags front and rear, three-point inertia-reel seatbelts on all seats with belt tensioner and belt force limiter at the front, crash sensors, Tyre Defect Indicator
Steering		Electric Power Steering (EPS), optional: Servotronic function, variable sport steering
Steering ratio, overall	:1	15.0
Tyres, front/rear		195/55 R16 87H
Rims, front/rear		6.5J x 16 steel

			BMW 116d 5-door
Transmission			
Type of transmission			6-speed manual (optional: 8-speed Steptronic transmission)
Gear ratios	I	:1	4.002 (4.714)
	II	:1	2.109 (3.143)
	III	:1	1.380 (2.106)
	IV	:1	1.000 (1.667)
	V	:1	0.781 (1.285)
	VI	:1	0.603 (1.000)
	VII	:1	– (0.839)
	VIII	:1	– (0.667)
	R	:1	3.647 (3.295)
Final drive		:1	3.077 (2.647)
Performance			
Power-to-weight ratio (DIN)		kg/kW	15.5 (15.9)
Output per litre		kW/ltr	56.8
Acceleration	0–100 km/h	s	10.3 (10.3)
in 5th gear	80–120 km/h	s	11.7
Top speed		km/h	200 (200)
BMW EfficientDynamics			
BMW EfficientDynamics standard features			Brake Energy Regeneration with recuperation display, Electric Power Steering (EPS), Auto Start Stop function, Optimum Gearshift Indicator, ECO PRO mode with coasting function (automatic), intelligent lightweight construction, optimised aerodynamic attributes, on-demand operation of ancillary units, map-controlled oil pump, differential with optimised warm-up behaviour, tyres with reduced rolling resistance
Fuel Consumption EU [3]			
With standard tyres, rims 7J x 16 and tyres 205/55 R16 as well as winter tyres			
Urban		ltr/100 km	4.3 (4.1)
Extra-urban		ltr/100 km	3.3 (3.4)
Combined		ltr/100 km	3.7 (3.6)
CO_2		g/km	97 (96)
With rims 7J x 17 and tyres 205/50 R17, with rims 7.5J x 17 and tyres 225/45 R 17, with rims 7.5J x 17 front, 8J x 17 rear and tyres 225/45 R17 front, 245/40 R17 rear			
Urban		ltr/100 km	4.7 (4.4)
Extra-urban		ltr/100 km	3.6 (3.6)
Combined		ltr/100 km	4.0 (3.9)
CO_2		g/km	104 (103)
With rims 7.5J x 18 front, 8J x 18 rear and tyres 225/40 R18 front, 245/35 R18 rear			
Urban		ltr/100 km	4.8 (4.6)
Extra-urban		ltr/100 km	3.7 (3.8)
Combined		ltr/100 km	4.1 (4.1)
CO_2		g/km	107 (107)
Emission rating			EU6

Specifications apply to ACEA markets/data relevant to homologation apply in part only to Germany (weight)
Figures in brackets apply to automatic transmission

[1] Height with roof fin: 1440 mm
[2] Oil change
[3] Fuel consumption and CO_2 emission figures depend on the selected tyre format

The BMW 1 Series 5-door. 116d EfficientDynamics Edition.

		BMW 116d EfficientDynamics Edition 5-door
Body		
No. of doors/seats		5 / 5
Length/width/height [1] (unladen)	mm	4329 / 1765 / 1413
Wheelbase	mm	2690
Track, front/rear	mm	1523 / 1558
Ground clearance	mm	132
Turning circle	m	10.9
Fuel tank capacity	approx. ltr	52
Cooling system incl. heater	ltr	7.0
Engine oil [2]	ltr	4.4
Weight, unladen, to DIN/EU	kg	1320 / 1395
Max. load to DIN	kg	565
Max. permissible weight	kg	1885
Max. axle load, front/rear	kg	855 / 1090
Max. trailer load (12%) braked/unbraked	kg	– / –
Max. roof load/max towbar download	kg	75 / –
Luggage comp. capacity	ltr	360 – 1200
Air resistance	C_d x A	0.29 x 2.14
Power Unit		
Config./No. of cyls./valves		in-line / 3 / 4
Engine technology		BMW TwinPower Turbo technology: turbocharger with variable inlet geometry, common rail direct injection with solenoid valve injectors, max. injection pressure: 2,000 bar
Effective capacity	cc	1496
Stroke/bore	mm	90.0 / 84.0
Compression ratio	:1	16.5
Fuel		diesel
Max. output	kW/hp	85 / 116
at	rpm	4000
Max torque	Nm	270
at	rpm	1750 – 2250
Electrical System		
Battery/installation	Ah/–	90 / luggage comp.
Alternator	A/W	180 / 2520
Driving Dynamics and Safety		
Suspension, front		Aluminium double-joint spring strut axle
Suspension, rear		Five-link axle in lightweight steel construction with double elastic bearing
Brakes, front		Single-piston floating-calliper disc brakes
Brakes, rear		Single-piston floating-calliper disc brakes
Driving stability systems		Standard: DSC incl. ABS, ASC and DTC (Dynamic Traction Control), CBC (Cornering Brake Control), DBC (Dynamic Brake Control), Dry Braking function, Fading Compensation, Start-Off Assistant
Safety equipment		Standard: airbags for driver and front passenger, side airbags for driver and front passenger, head airbags front and rear, three-point inertia-reel seatbelts on all seats with belt tensioner and belt force limiter at the front, crash sensors, Tyre Defect Indicator
Steering		Electric Power Steering (EPS), optional: Servotronic function, variable sport steering
Steering ratio, overall	:1	15.0
Tyres, front/rear		205/55 R16 91V
Rims, front/rear		7J x 16 steel

			BMW 116d EfficientDynamics Edition 5-door
Transmission			
Type of transmission			6-speed manual
Gear ratios	I	:1	4.002
	II	:1	2.109
	III	:1	1.38
	IV	:1	1.000
	V	:1	0.781
	VI	:1	0.603
	R	:1	3.647
Final drive		:1	2.929
Performance			
Power-to-weight ratio (DIN)		kg/kW	15.5
Output per litre		kW/ltr	56.8
Acceleration	0–100 km/h	s	10.4
in 5th gear	80–120 km/h	s	12.9
Top speed		km/h	195
BMW EfficientDynamics			
BMW EfficientDynamics standard features			Brake Energy Regeneration with recuperation display, Electric Power Steering (EPS), Auto Start Stop function, Optimum Gearshift Indicator, ECO PRO mode, intelligent lightweight construction, optimised aerodynamic attributes, on-demand operation of ancillary units, map-controlled oil pump, differential with optimised warm-up behaviour, tyres with reduced rolling resistance
Fuel Consumption EU [3]			
With standard tyres			
Urban		ltr/100 km	3.9
Extra-urban		ltr/100 km	3.1
Combined		ltr/100 km	3.4
CO_2		g/km	89
With rims 7J x 17 and tyres 205/50 R17, with rims 7.5J x 17 and tyres 225/45 R 17, with rims 7.5J x 17 front, 8J x 17 rear and tyres 225/45 R17 front, 245/40 R17 rear as well as winter tyres			
Urban		ltr/100 km	4.3
Extra-urban		ltr/100 km	3.4
Combined		ltr/100 km	3.7
CO_2		g/km	98
With rims 7.5J x 18 front, 8J x 18 rear and tyres 225/40 R18 front, 245/35 R18 rear			
Urban		ltr/100 km	4.4
Extra-urban		ltr/100 km	3.5
Combined		ltr/100 km	3.8
CO_2		g/km	101
Emission rating			EU6

Specifications apply to ACEA markets/data relevant to homologation apply in part only to Germany (weight)

[1] Height with roof fin: 1432 mm
[2] Oil change
[3] Fuel consumption and CO_2 emission figures depend on the selected tyre format

The BMW 1 Series 5-door. 118d, 118d xDrive.

		BMW 118d 5-door	BMW 118d xDrive 5-door
Body			
No. of doors/seats		5 / 5	5 / 5
Length/width/height [1] (unladen)	mm	4329 / 1765 / 1421	4329 / 1765 / 1421
Wheelbase	mm	2690	2690
Track, front/rear	mm	1535 / 1569	1522 / 1556
Ground clearance	mm	140	140
Turning circle	m	10.9	11.3
Fuel tank capacity	approx. ltr	52	52
Cooling system incl. heater	ltr	7.0	7.0
Engine oil [2]	ltr	5.0	5.0
Weight, unladen, to DIN/EU	kg	1350 / 1425 (1375 / 1450)	1430 / 1505
Max. load to DIN	kg	565	550
Max. permissible weight	kg	1915 (1940)	1975
Max. axle load, front/rear	kg	900 / 1090	940 / 1090
Max. trailer load (12%) braked/unbraked	kg	1500 / 690	1500 / 710
Max. roof load/max towbar download	kg	75 / 75	75 / 75
Luggage comp. capacity	ltr	360 – 1200	360 – 1200
Air resistance	C_d x A	0.30 x 2.14	0.31 x 2.14
Power Unit			
Config./No. of cyls./valves		in-line / 4 / 4	in-line / 4 / 4
Engine technology		BMW TwinPower Turbo technology: turbocharger with variable inlet geometry, common rail direct injection with solenoid valve injectors, max. injection pressure: 2,000 bar	
Effective capacity	cc	1995	1995
Stroke/bore	mm	90.0 / 84.0	90.0 / 84.0
Compression ratio	:1	16.5	16.5
Fuel		diesel	diesel
Max. output	kW/hp	110 / 150	110 / 150
at	rpm	4000	4000
Max torque	Nm	320	320
at	rpm	1500 – 3000	1500 – 3000
Electrical System			
Battery/installation	Ah/–	90 / luggage comp.	90 / luggage comp.
Alternator	A/W	150 / 2100	150 / 2100
Driving Dynamics and Safety			
Suspension, front		Aluminium double-joint spring strut axle	
Suspension, rear		Five-link axle in lightweight steel construction with double elastic bearing	
Brakes, front		Single-piston floating-calliper disc brakes	
Brakes, rear		Single-piston floating-calliper disc brakes	
Driving stability systems		Standard: DSC incl. ABS, ASC and DTC (Dynamic Traction Control), CBC (Cornering Brake Control), DBC (Dynamic Brake Control), Dry Braking function, Fading Compensation, Start-Off Assistant; BMW 118d xDrive: linked to xDrive all-wheel-drive system in Integrated Chassis Management (ICM)	
Safety equipment		Standard: airbags for driver and front passenger, side airbags for driver and front passenger, head airbags front and rear, three-point inertia-reel seatbelts on all seats with belt tensioner and belt force limiter at the front, crash sensors, Tyre Defect Indicator	
Steering		Electric Power Steering (EPS), optional: Servotronic function, variable sport steering	
Steering ratio, overall	:1	15.0	15.1
Tyres, front/rear		195/55 R16 87W	205/55 R16 91V
Rims, front/rear		6.5J x 16 steel	7J x 16 steel

			BMW 118d 5-door	BMW 118d xDrive 5-door
Transmission				
Type of transmission			6-speed manual (optional: 8-speed Steptronic transmission)	6-speed manual
Gear ratios	I	:1	4.002 (5.000)	4.110
	II	:1	2.109 (3.200)	2.248
	III	:1	1.396 (2.143)	1.403
	IV	:1	1.000 (1.720)	1.000
	V	:1	0.781 (1.314)	0.802
	VI	:1	0.668 (1.000)	0.659
	VII	:1	– (0.822)	–
	VIII	:1	– (0.640)	–
	R	:1	3.647 (3.456)	3.727
Final drive		:1	3.077 (2.647)	3.154
Performance				
Power-to-weight ratio (DIN)		kg/kW	12.3 (12.5)	13.0
Output per litre		kW/ltr	55.1	55.1
Acceleration	0–100 km/h	s	8.3 (8.1)	8.4
in 5th gear	80–120 km/h	s	9.2 (–)	9.5
Top speed		km/h	212 (212)	210
BMW EfficientDynamics				
BMW EfficientDynamics standard features			Brake Energy Regeneration with recuperation display, Electric Power Steering (EPS), Auto Start Stop function, Optimum Gearshift Indicator, ECO PRO mode with coasting function (automatic), intelligent lightweight construction, optimised aerodynamic attributes, on-demand operation of ancillary units, map-controlled oil pump, differential with optimised warm-up behaviour, efficiency- and weight-optimised transfer case (BMW 118d xDrive), tyres with reduced rolling resistance	
Fuel Consumption EU [3]				
With standard tyres				
Urban		ltr/100 km	4.8 (4.5)	5.1
Extra-urban		ltr/100 km	3.5 (3.4)	3.8
Combined		ltr/100 km	4.0 (3.8)	4.3
CO_2		g/km	109 (99)	113
With rims 7J x 16 and tyres 205/55 R16 (BMW 118d), with rims 7J x 17 and tyres 205/50 R17, with rims 7.5J x 17 and tyres 225/45 R 17 as well as winter tyres, with rims 7.5J x 17 front, 8J x 17 rear and tyres 225/45 R17 front, 245/40 R17 rear				
Urban		ltr/100 km	5.0 (4.7)	5.4
Extra-urban		ltr/100 km	3.6 (3.6)	4.0
Combined		ltr/100 km	4.1 (4.0)	4.5
CO_2		g/km	109 (105)	119
With rims 7.5J x 18 front, 8J x 18 rear and tyres 225/40 R18 front, 245/35 R18 rear				
Urban		ltr/100 km	5.2 (4.9)	5.6
Extra-urban		ltr/100 km	3.8 (3.8)	4.1
Combined		ltr/100 km	4.3 (4.2)	4.7
CO_2		g/km	114 (110)	123
Emission rating			EU6	EU6

Specifications apply to ACEA markets/data relevant to homologation apply in part only to Germany (weight)
BMW 118d: figures in brackets apply to automatic transmission

[1] Height with roof fin: 1440 mm
[2] Oil change
[3] Fuel consumption and CO_2 emission figures depend on the selected tyre format

The BMW 1 Series 5-door. 120d, 120d xDrive.

		BMW 120d 5-door	BMW 120d xDrive 5-door
Body			
No. of doors/seats		5 / 5	5 / 5
Length/width/height [1] (unladen)	mm	4329 / 1765 / 1421	4329 / 1765 / 1421
Wheelbase	mm	2690	2690
Track, front/rear	mm	1521 / 1556	1522 / 1556
Ground clearance	mm	140	140
Turning circle	m	10.9	11.3
Fuel tank capacity	approx. ltr	52	52
Cooling system incl. heater	ltr	7.0	7.0
Engine oil [2]	ltr	5.0	5.0
Weight, unladen, to DIN/EU	kg	1375 / 1450 (1390 / 1465)	1455 / 1530
Max. load to DIN	kg	565	550
Max. permissible weight	kg	1940 (1955)	2005
Max. axle load, front/rear	kg	900 / 1090	975 / 1090
Max. trailer load (12%) braked/unbraked	kg	1500 / 710	1500 / 750
Max. roof load/max towbar download	kg	75 / 75	75 / 75
Luggage comp. capacity	ltr	360 – 1200	360 – 1200
Air resistance	C_d x A	0.30 x 2.14	0.31 x 2.14
Power Unit			
Config./No. of cyls./valves		in-line / 4 / 4	in-line / 4 / 4
Engine technology		BMW TwinPower Turbo technology: turbocharger with variable inlet geometry, common rail direct injection with solenoid valve injectors, max. injection pressure: 2,000 bar	
Effective capacity	cc	1995	1995
Stroke/bore	mm	90.0 / 84.0	90.0 / 84.0
Compression ratio	:1	16.5	16.5
Fuel		diesel	diesel
Max. output	kW/hp	140 / 190	140 / 190
at	rpm	4000	4000
Max torque	Nm	400	400
at	rpm	1750 – 2500	1750 – 2500
Electrical System			
Battery/installation	Ah/–	90 / luggage comp.	90 / luggage comp.
Alternator	A/W	150 / 2100	150 / 2100
Driving Dynamics and Safety			
Suspension, front		Aluminium double-joint spring strut axle	
Suspension, rear		Five-link axle in lightweight steel construction with double elastic bearing	
Brakes, front		Single-piston floating-calliper disc brakes	
Brakes, rear		Single-piston floating-calliper disc brakes	
Driving stability systems		Standard: DSC incl. ABS, ASC and DTC (Dynamic Traction Control), CBC (Cornering Brake Control), DBC (Dynamic Brake Control), Dry Braking function, Fading Compensation, Start-Off Assistant; BMW 120d xDrive: linked to xDrive all-wheel-drive system in Integrated Chassis Management (ICM)	
Safety equipment		Standard: airbags for driver and front passenger, side airbags for driver and front passenger, head airbags front and rear, three-point inertia-reel seatbelts on all seats with belt tensioner and belt force limiter at the front, crash sensors, Tyre Defect Indicator	
Steering		Electric Power Steering (EPS), optional: Servotronic function, variable sport steering	
Steering ratio, overall	:1	15.0	15.1
Tyres, front/rear		205/55 R16 91V	205/55 R16 91V
Rims, front/rear		7J x 16 steel	7J x 16 steel

			BMW 120d 5-door	BMW 120d xDrive 5-door
Transmission				
Type of transmission			6-speed manual (optional: 8-speed Steptronic transmission)	8-speed Steptronic transmission
Gear ratios	I	:1	4.110 (5.000)	5.000
	II	:1	2.248 (3.200)	3.200
	III	:1	1.403 (2.143)	2.143
	IV	:1	1.000 (1.720)	1.720
	V	:1	0.802 (1.314)	1.314
	VI	:1	0.659 (1.000)	1.000
	VII	:1	– (0.822)	0.822
	VIII	:1	– (0.640)	0.640
	R	:1	3.727 (3.456)	3.456
Final drive		:1	3.077 (2.647)	2.647
Performance				
Power-to-weight ratio (DIN)		kg/kW	9.8 (9.9)	10.4
Output per litre		kW/ltr	70.2	70.2
Acceleration	0–100 km/h	s	7.1 (7.0)	6.8
in 5th gear	80–120 km/h	s	7.2 (–)	–
Top speed		km/h	228 (228)	222
BMW EfficientDynamics				
BMW EfficientDynamics standard features			Brake Energy Regeneration with recuperation display, Electric Power Steering (EPS), Auto Start Stop function, Optimum Gearshift Indicator, ECO PRO mode with coasting function (automatic), intelligent lightweight construction, optimised aerodynamic attributes, on-demand operation of ancillary units, map-controlled oil pump, differential with optimised warm-up behaviour, efficiency- and weight-optimised transfer case (BMW 120d xDrive), tyres with reduced rolling resistance	
Fuel Consumption EU [3)]				
With standard tyres				
Urban		ltr/100 km	5.0 (4.6)	5.1
Extra-urban		ltr/100 km	3.6 (3.5)	3.9
Combined		ltr/100 km	4.1 (3.9)	4.3
CO_2		g/km	108 (103)	113
With rims 7J x 17 and tyres 205/50 R17, with rims 7.5J x 17 and tyres 225/45 R 17 as well as winter tyres, with rims 7.5J x 17 front, 8J x 17 rear and tyres 225/45 R17 front, 245/40 R17 rear				
Urban		ltr/100 km	5.3 (4.9)	5.3
Extra-urban		ltr/100 km	3.7 (3.7)	4.1
Combined		ltr/100 km	4.3 (4.1)	4.5
CO_2		g/km	114 (109)	119
With rims 7.5J x 18 front, 8J x 18 rear and tyres 225/40 R18 front, 245/35 R18 rear				
Urban		ltr/100 km	5.5 (5.1)	5.5
Extra-urban		ltr/100 km	3.9 (3.9)	4.3
Combined		ltr/100 km	4.5 (4.3)	4.7
CO_2		g/km	118 (114)	124
Emission rating			EU6	EU6

Specifications apply to ACEA markets/data relevant to homologation apply in part only to Germany (weight)
BMW 120d: figures in brackets apply to automatic transmission (standard in the BMW 120d xDrive)

[1)] Height with roof fin: 1440 mm
[2)] Oil change
[3)] Fuel consumption and CO_2 emission figures depend on the selected tyre format

The BMW 1 Series 5-door. 125d.

		BMW 125d 5-door
Body		
No. of doors/seats		5 / 5
Length/width/height [1] (unladen)	mm	4329 / 1765 / 1421
Wheelbase	mm	2690
Track, front/rear	mm	1521 / 1556
Ground clearance	mm	140
Turning circle	m	10.9
Fuel tank capacity	approx. ltr	52
Cooling system incl. heater	ltr	7.0
Engine oil [2]	ltr	5.0
Weight, unladen, to DIN/EU	kg	1430 / 1505
Max. load to DIN	kg	565
Max. permissible weight	kg	1995
Max. axle load, front/rear	kg	940 / 1115
Max. trailer load (12%) braked/unbraked	Kg	1500 / 710
Max. roof load/max towbar download	kg	75 / 75
Luggage comp. capacity	ltr	360 – 1200
Air resistance	C_d x A	0.31 x 2.14
Power Unit		
Config./No. of cyls./valves		in-line / 4 / 4
Engine technology		BMW TwinPower Turbo technology: multi-stage charging, high- and low-pressure turbocharger with variable inlet geometry, common rail direct injection with solenoid valve injectors, max. injection pressure: 2,500 bar
Effective capacity	cc	1995
Stroke/bore	mm	90.0 / 84.0
Compression ratio	:1	16.5
Fuel		diesel
Max. output	kW/hp	165 / 224
at	rpm	4400
Max torque	Nm	450
at	rpm	1500 – 3000
Electrical System		
Battery/installation	Ah/–	90 / luggage comp.
Alternator	A/W	150 / 2100
Driving Dynamics and Safety		
Suspension, front		Aluminium double-joint spring strut axle
Suspension, rear		Five-link axle in lightweight steel construction with double elastic bearing
Brakes, front		Single-piston floating-calliper disc brakes
Brakes, rear		Single-piston floating-calliper disc brakes
Driving stability systems		Standard: DSC incl. ABS, ASC and DTC (Dynamic Traction Control), CBC (Cornering Brake Control), DBC (Dynamic Brake Control), Dry Braking function, Fading Compensation, Start-Off Assistant
Safety equipment		Standard: airbags for driver and front passenger, side airbags for driver and front passenger, head airbags front and rear, three-point inertia-reel seatbelts on all seats with belt tensioner and belt force limiter at the front, crash sensors, Tyre Defect Indicator
Steering		Electric Power Steering (EPS), optional: Servotronic function, variable sport steering
Steering ratio, overall	:1	15.0
Tyres, front/rear		205/50 R17 89W
Rims, front/rear		7J x 17 light-alloy

			BMW 125d 5-door
Transmission			
Type of transmission			8-speed Steptronic transmission
Gear ratios	I	:1	5.000
	II	:1	3.200
	III	:1	2.143
	IV	:1	1.720
	V	:1	1.314
	VI	:1	1.000
	VII	:1	0.822
	VIII	:1	0.640
	R	:1	3.456
Final drive		:1	2.647
Performance			
Power-to-weight ratio (DIN)		kg/kW	8.7
Output per litre		kW/ltr	82.7
Acceleration	0–100 km/h	s	6.3
in 5th gear	80–120 km/h	s	–
Top speed		km/h	240
BMW EfficientDynamics			
BMW EfficientDynamics standard features			Brake Energy Regeneration with recuperation display, Electric Power Steering (EPS), Auto Start Stop function, ECO PRO mode with coasting function, intelligent lightweight construction, optimised aerodynamic attributes, on-demand operation of ancillary units, map-controlled oil pump, differential with optimised warm-up behaviour, tyres with reduced rolling resistance
Fuel Consumption EU [3]			
With standard tyres			
Urban		ltr/100 km	5.1
Extra-urban		ltr/100 km	3.9
Combined		ltr/100 km	4.3
CO_2		g/km	114
With rims 7.5J x 17 and tyres 225/45 R 17 as well as winter tyres, with rims 7.5J x 17 front, 8J x 17 rear and tyres 225/45 R17 front, 245/40 R17 rear, with rims 7.5J x 18 front, 8J x 18 rear and tyres 225/40 R18 front, 245/35 R18 rear			
Urban		ltr/100 km	5.4
Extra-urban		ltr/100 km	4.1
Combined		ltr/100 km	4.6
CO_2		g/km	121
Emission rating			EU6

Specifications apply to ACEA markets/data relevant to homologation apply in part only to Germany (weight)

[1] Height with roof fin: 1440 mm
[2] Oil change
[3] Fuel consumption and CO_2 emission figures depend on the selected tyre format

Output and torque diagrams.
The BMW 1 Series.
116i.

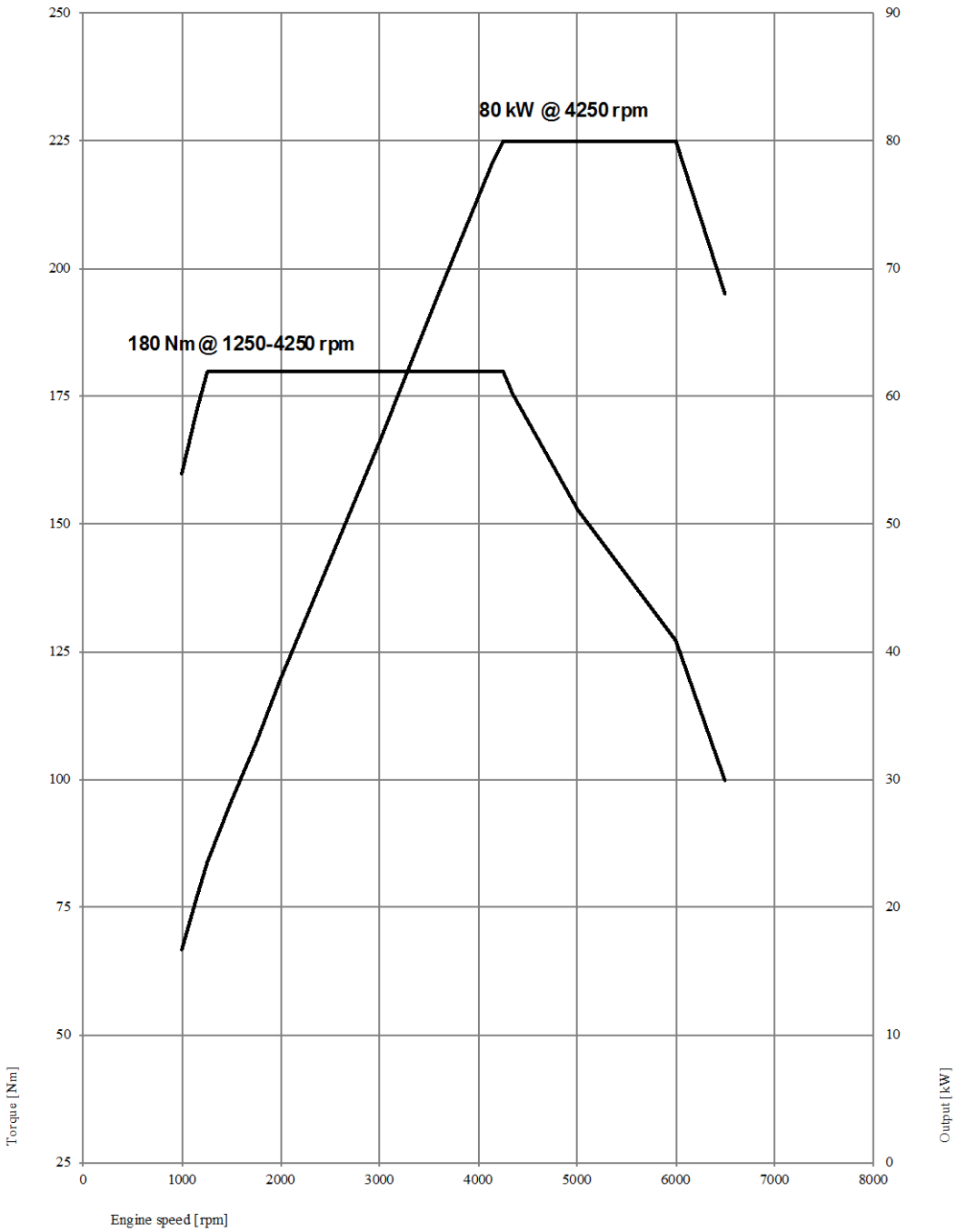

The BMW 1 Series. 118i.

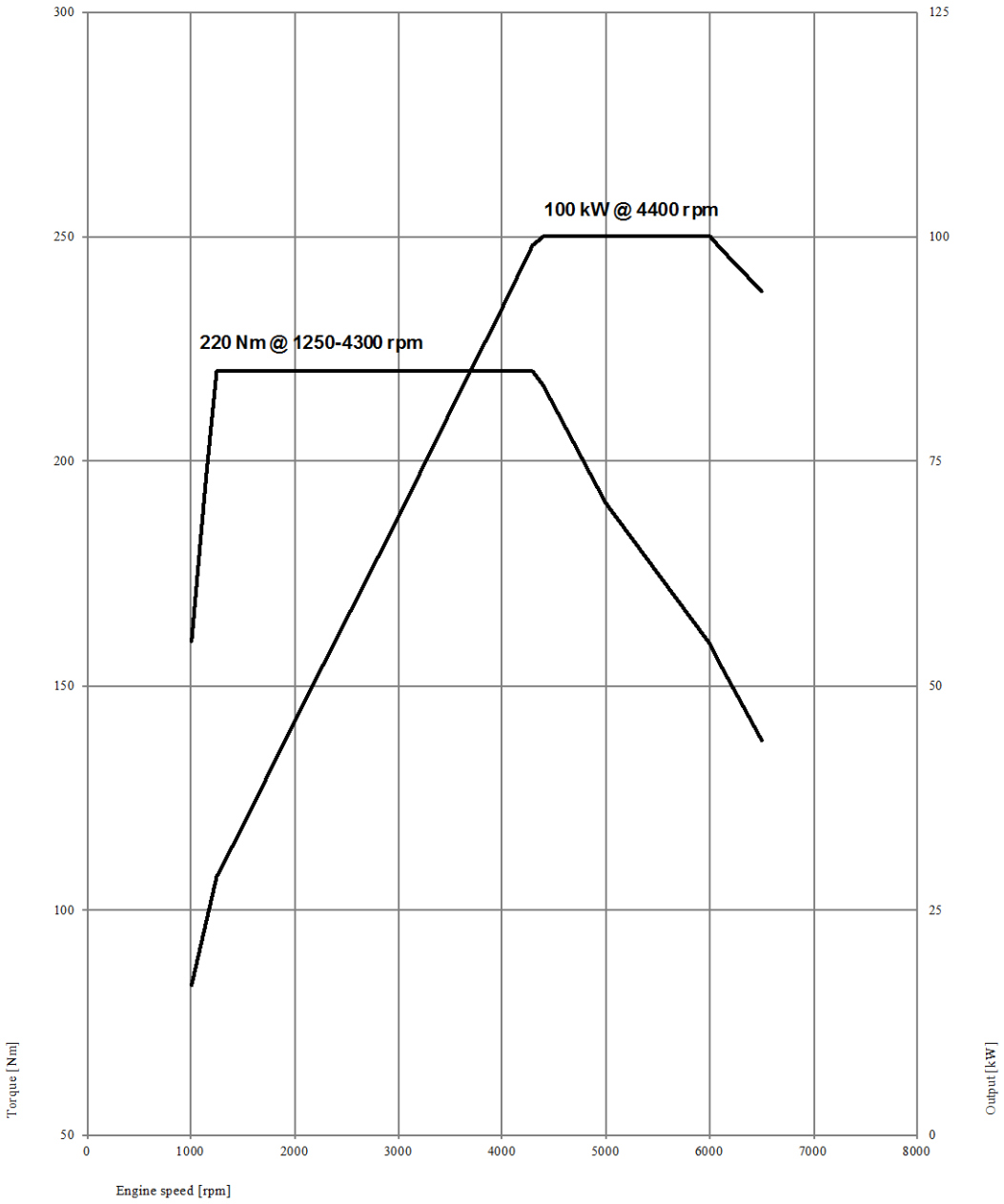

The BMW 1 Series. 120i.

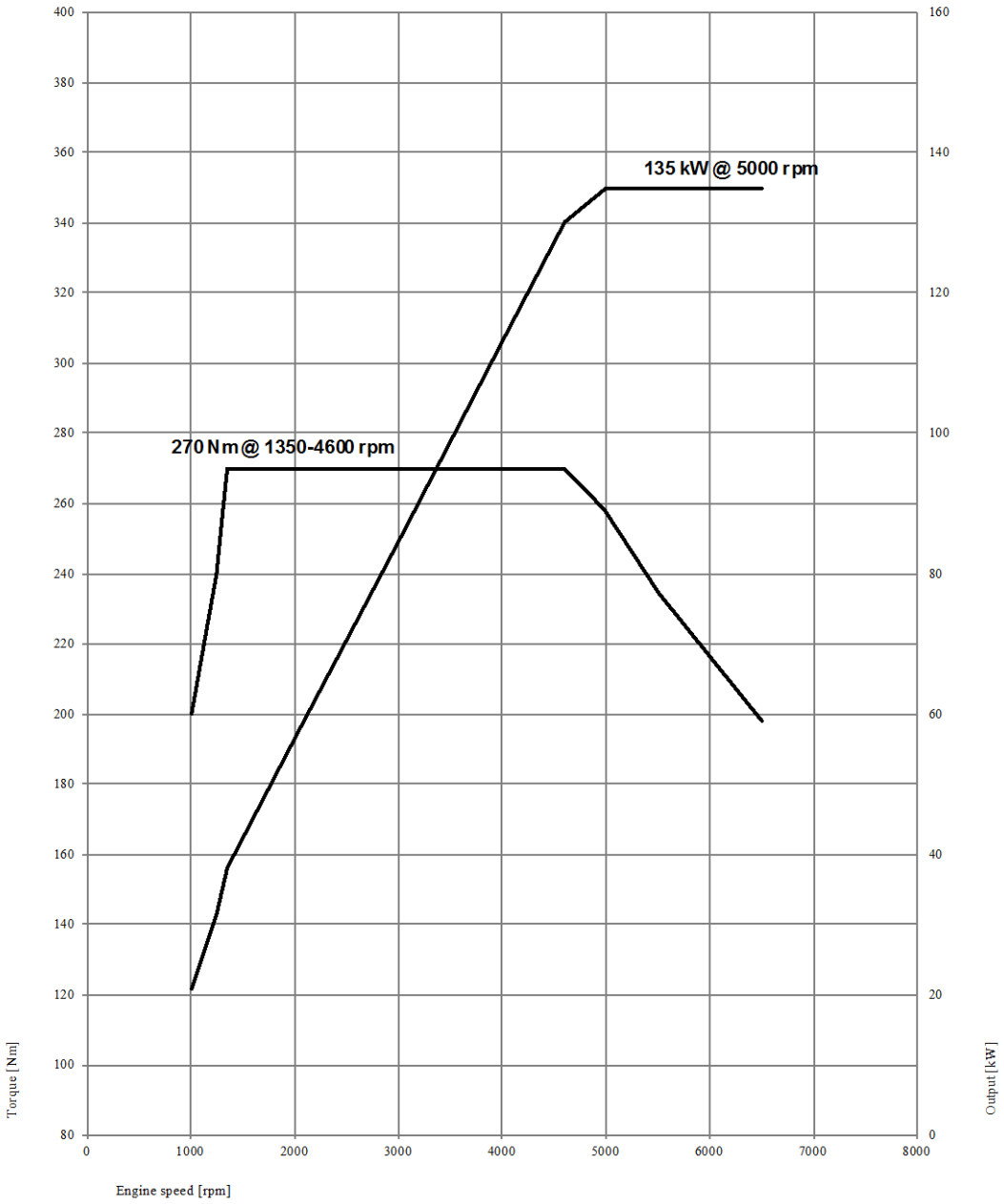

The BMW 1 Series.
120i manual.

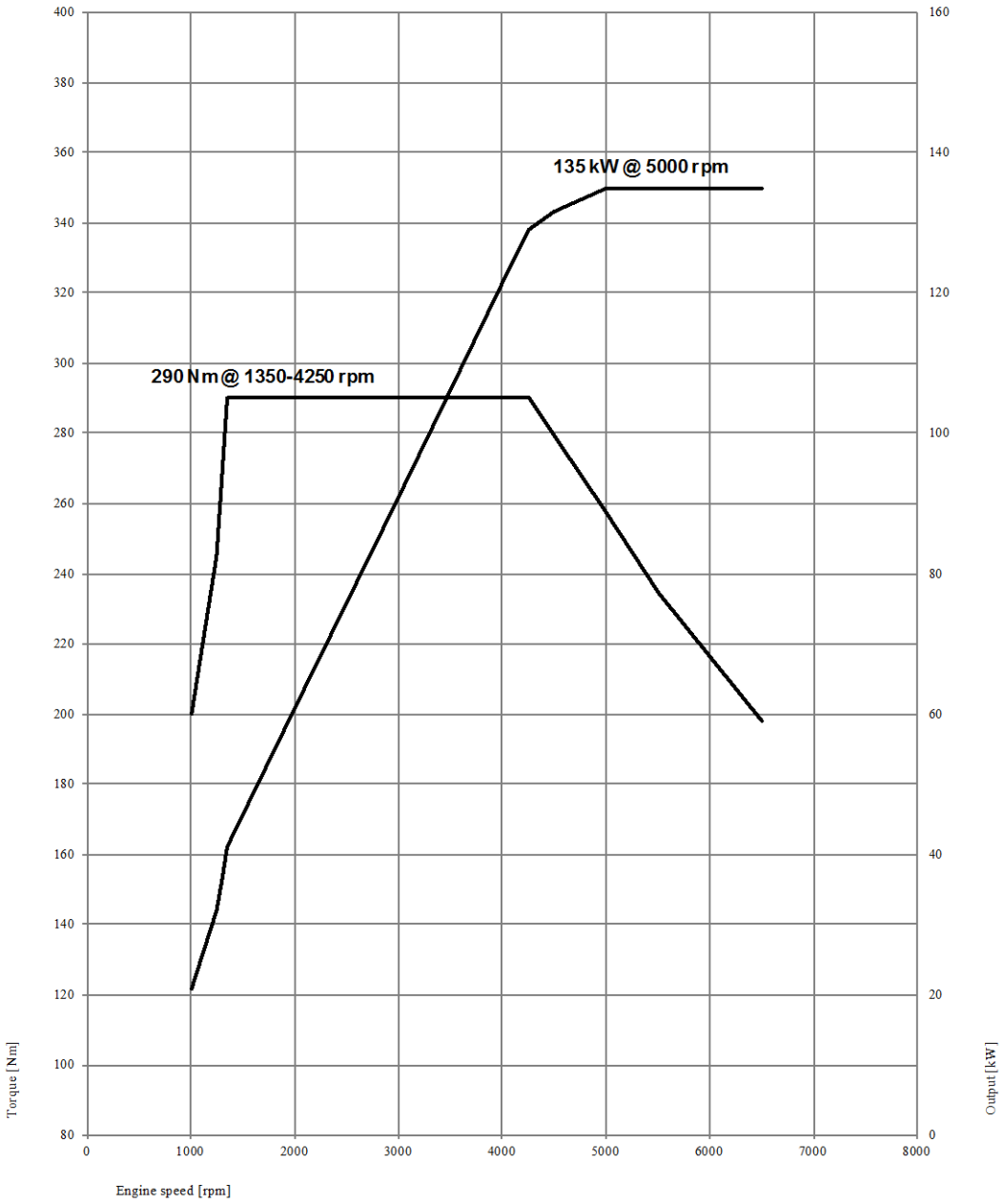

The BMW 1 Series.
125i.

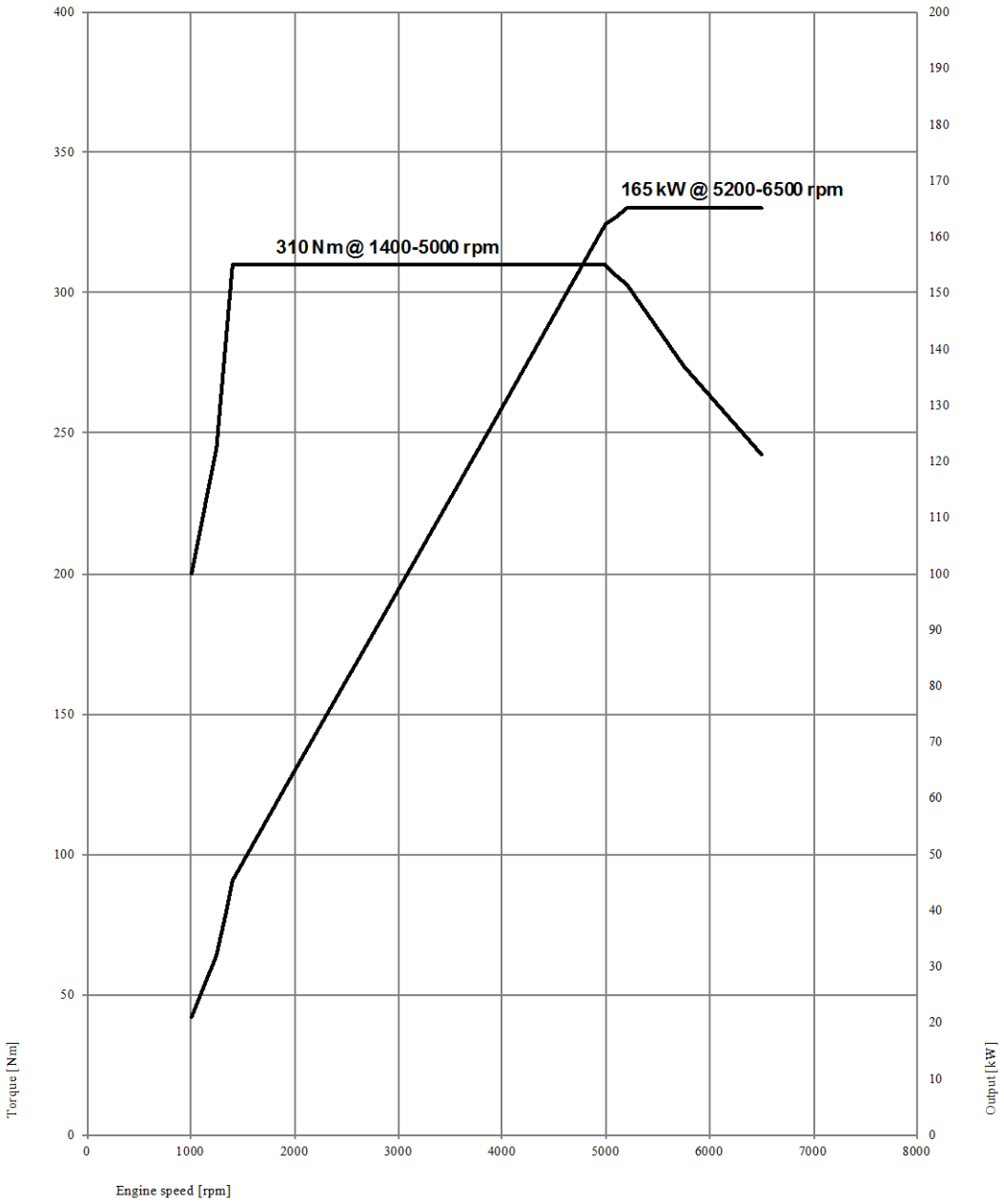

The BMW 1 Series.
M140i, M140i xDrive.

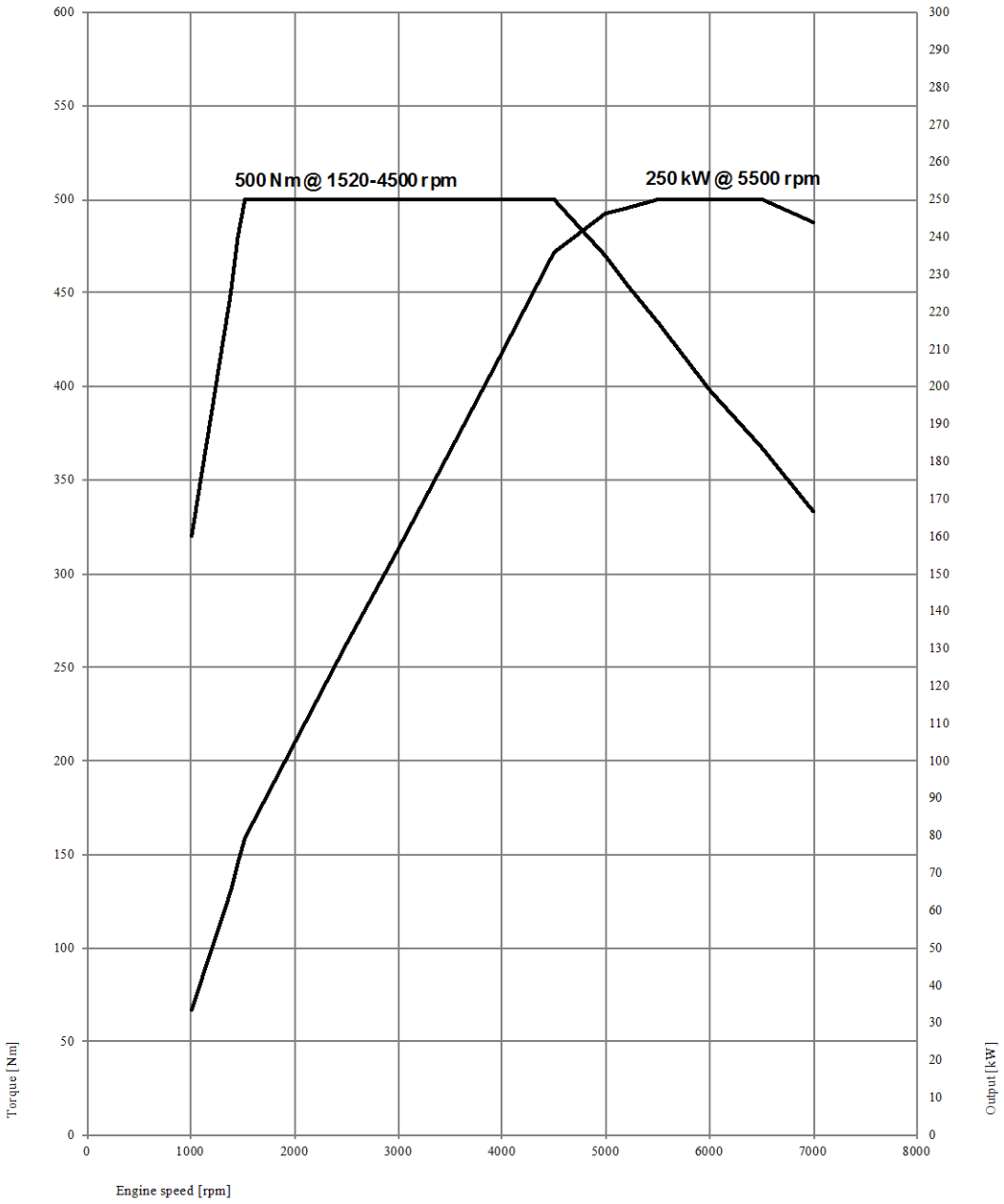

The BMW 1 Series.
116d, 116d EfficientDynamics Edition.

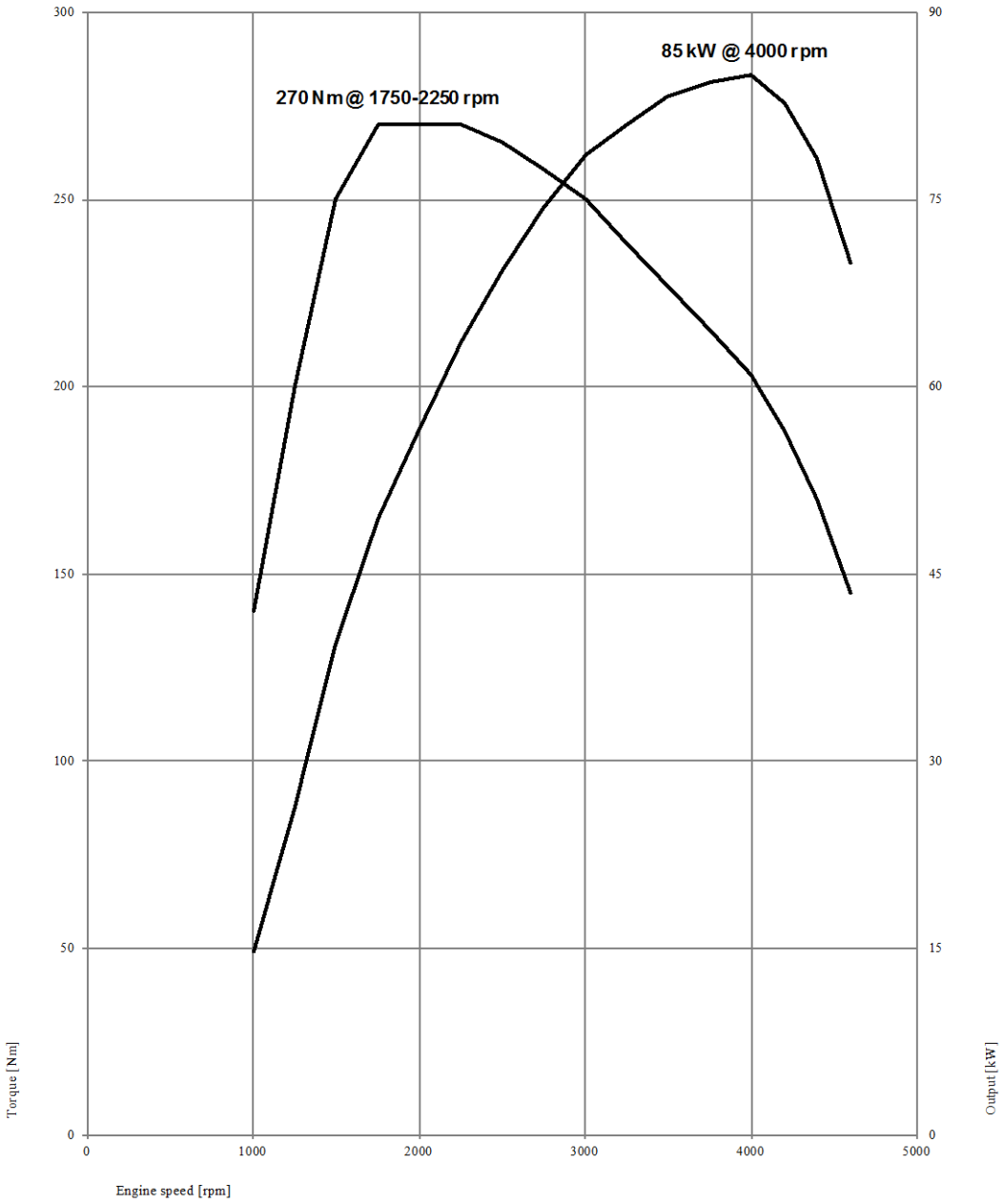

The BMW 1 Series.
118d, 118d xDrive.

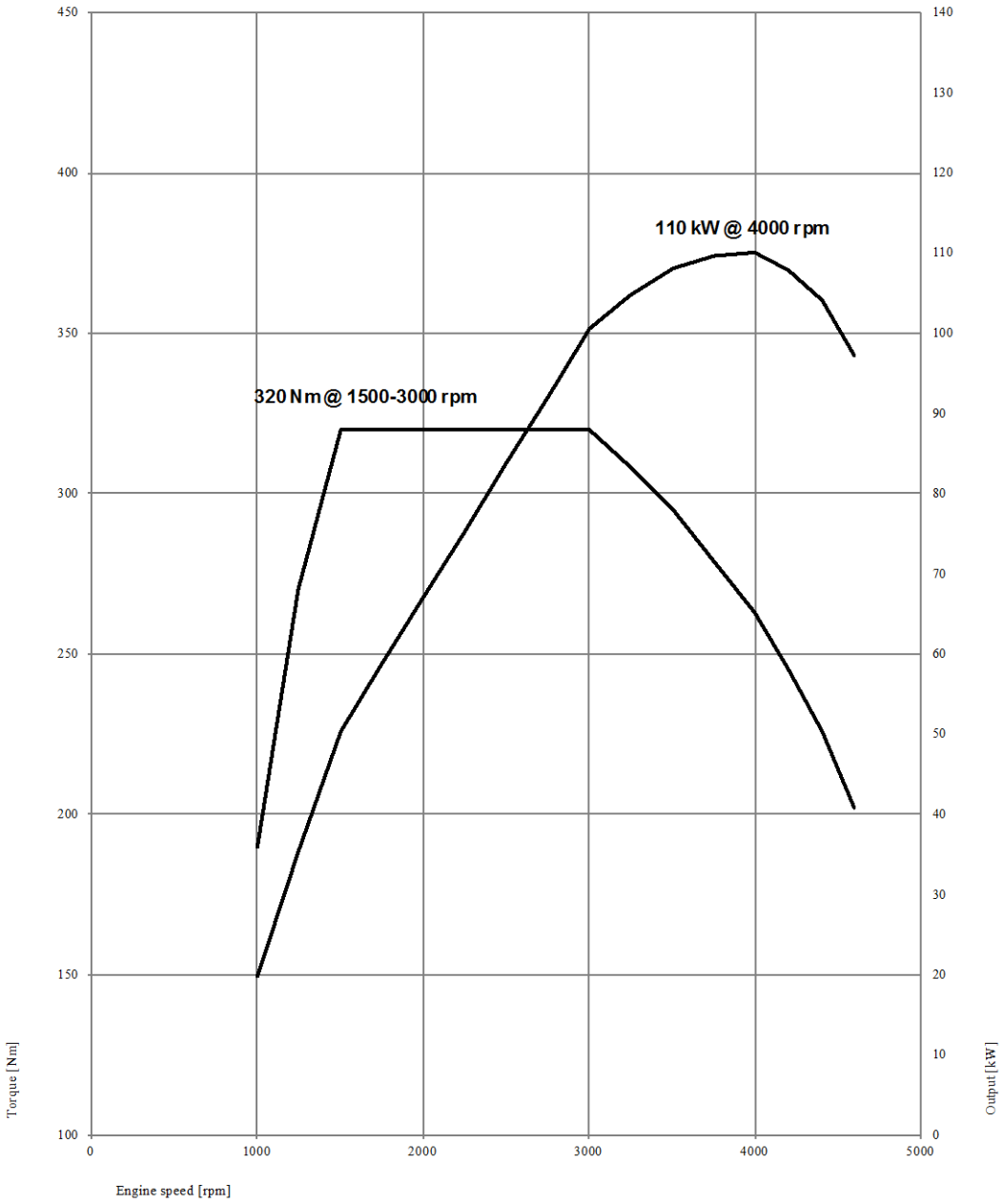

The BMW 1 Series.
120d, 120d xDrive.

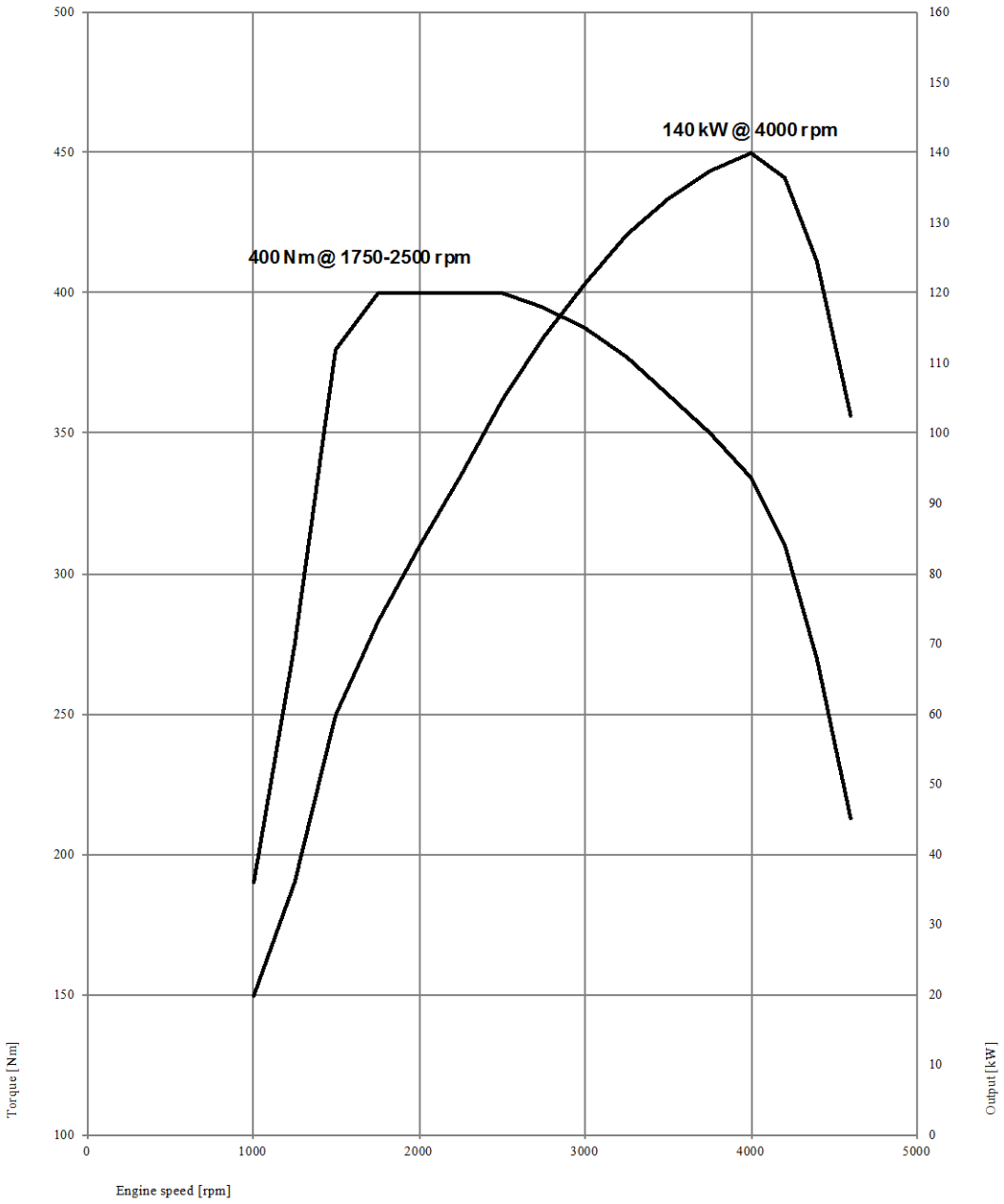

The BMW 1 Series.
125d.

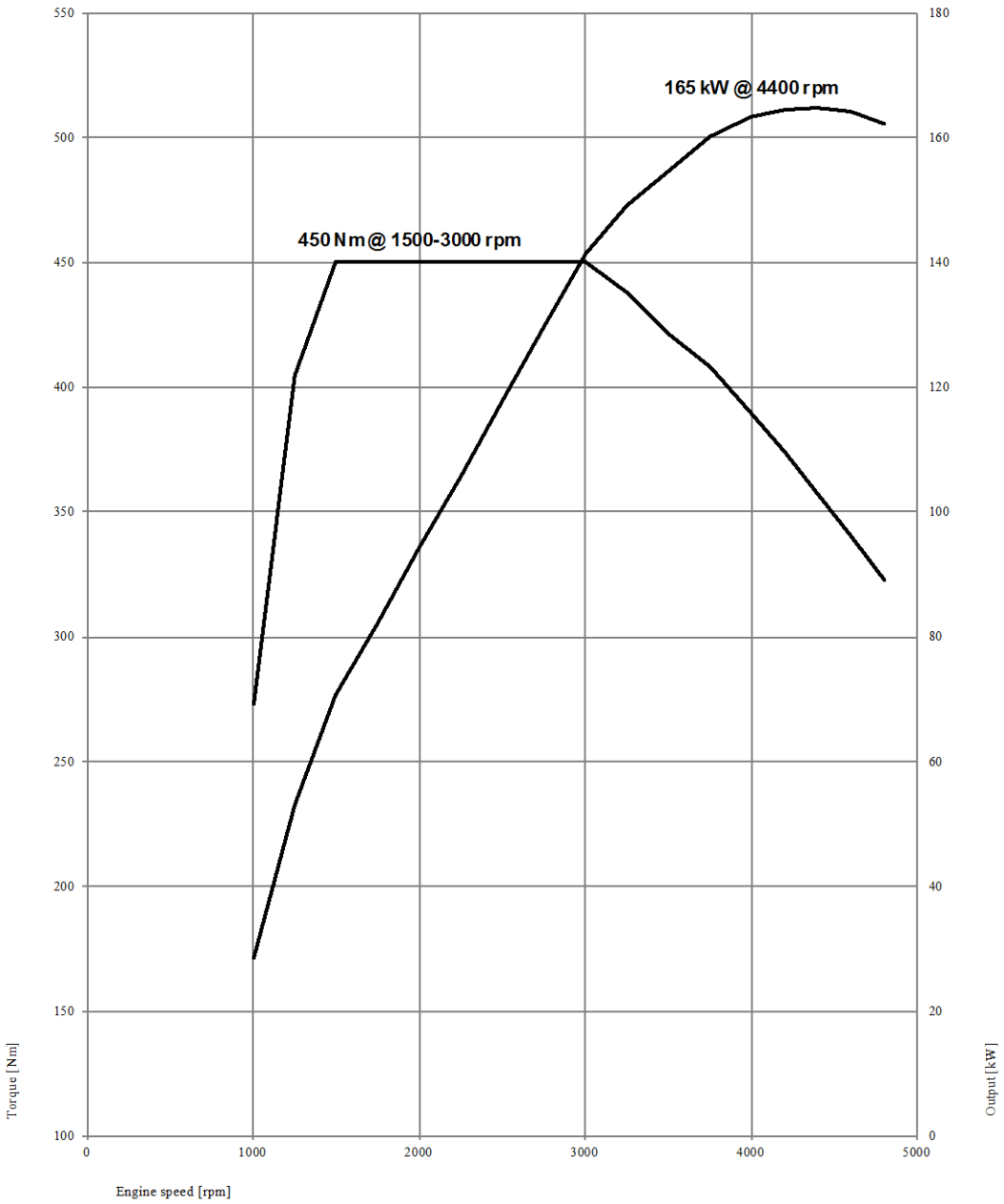

Exterior and interior dimensions.
The BMW 1 Series 3-door.

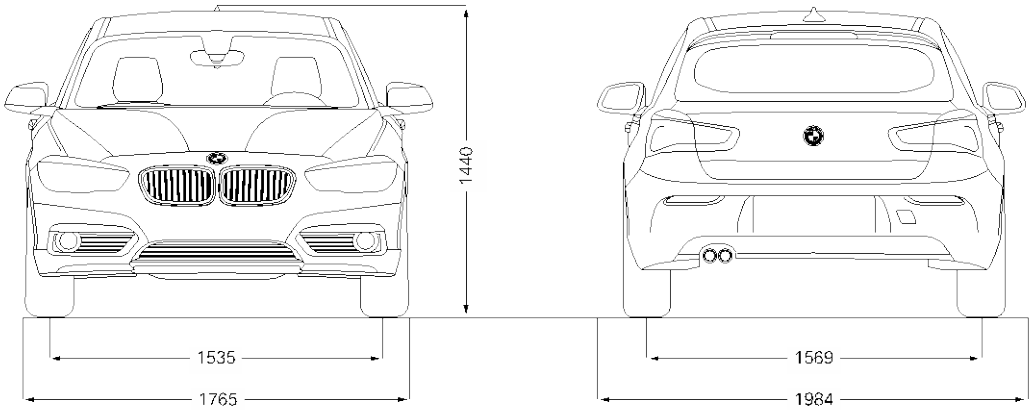

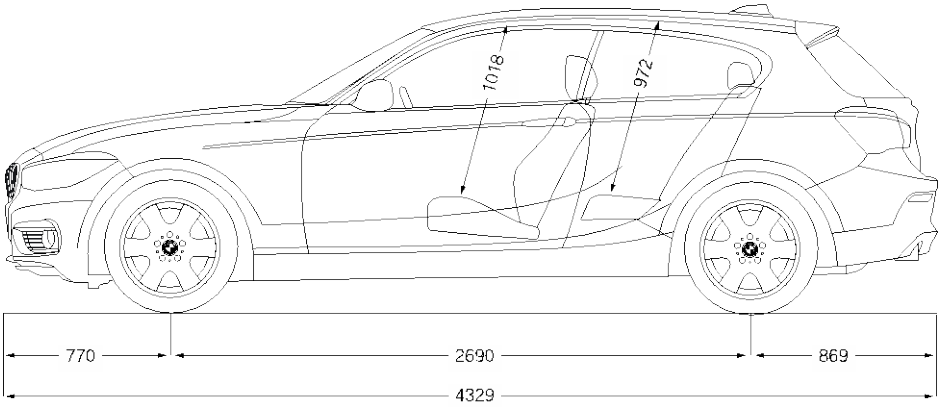

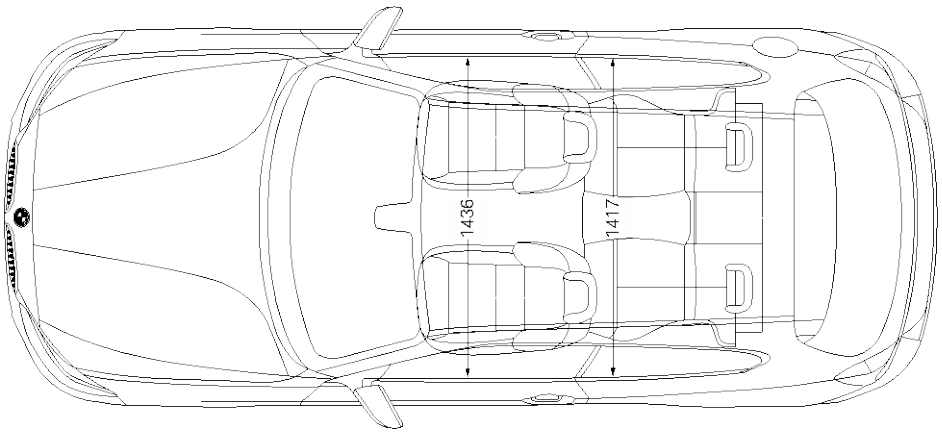
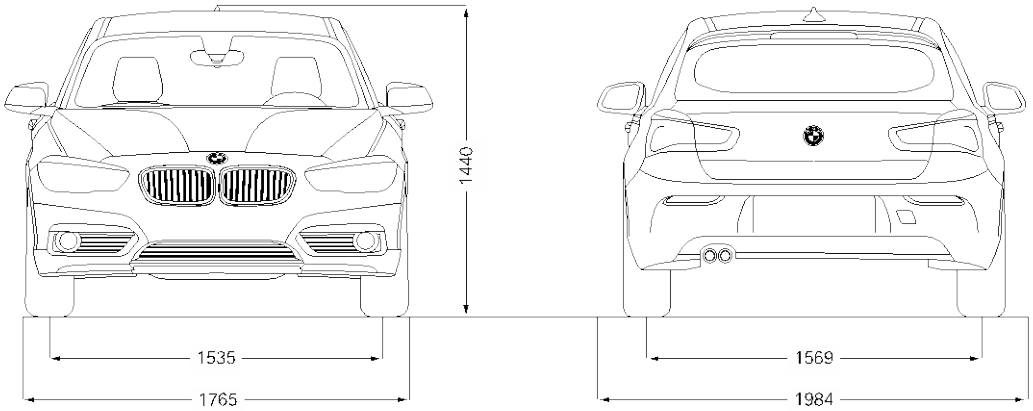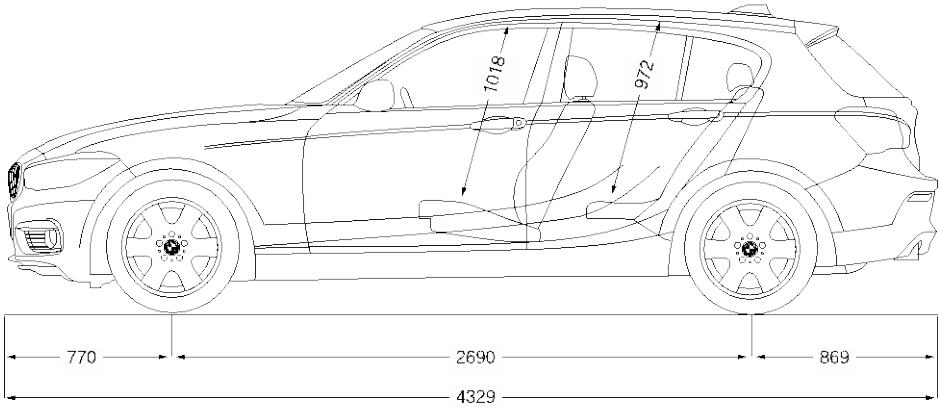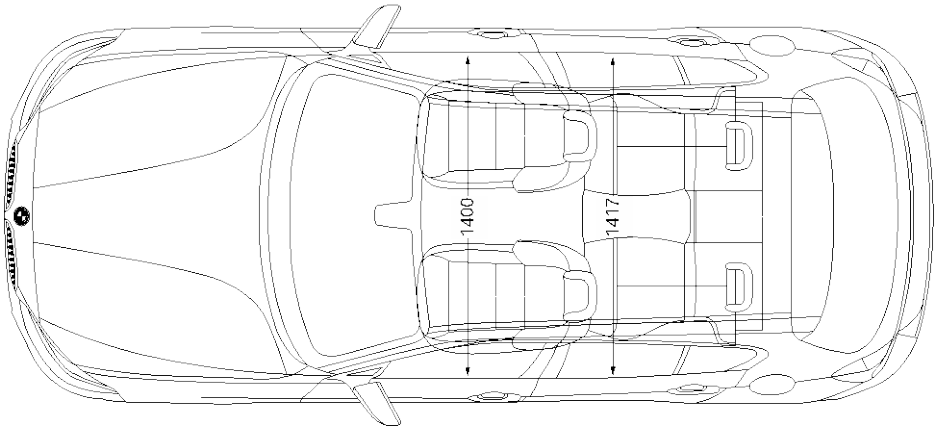
The BMW 1 Series 5-door.